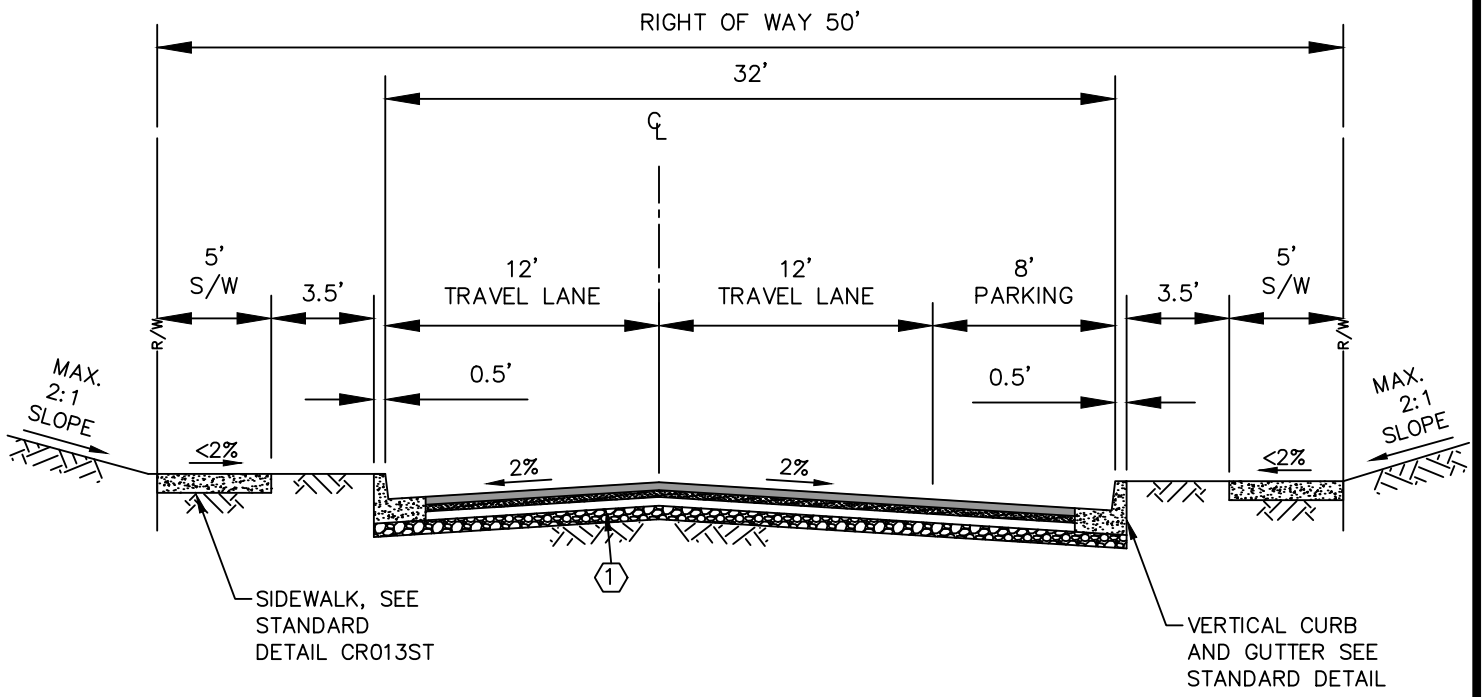

LOCAL ACCESS
PARKING ON ONE SIDE

N.T.S.

(1) PAVEMENT DESIGN BY CURRENT WASHINGTON STATE LICENSED CIVIL ENGINEER AND AS APPROVED BY THE CITY ENGINEER, BUT NOT LESS THAN 3 INCHES HMA, 3 INCHES CSTC AND 9 INCHES OF CSBC.

CITY OF CASTLE ROCK			
LOCAL ACCESS w/ PARKING ONE SIDE STREET SECTION			
APPROVED: BY CITY	07-20-20 DATE		DWG. NO. CR001ST
DATE: 07/20	DRWN: KAR	CHKD: CLR	SCALE: NONE

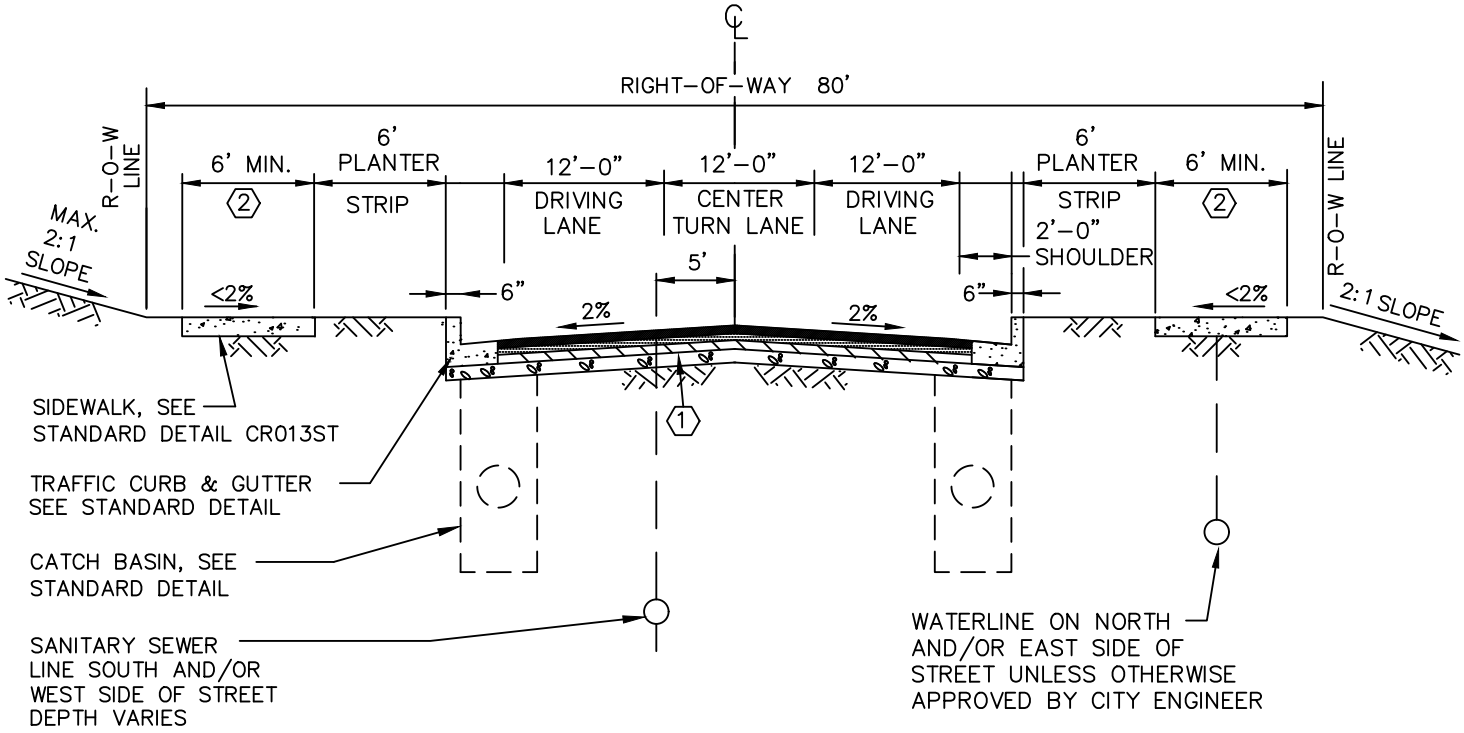

NOTE:

1. PAVEMENT DESIGN BY CURRENT WASHINGTON STATE LICENSED CIVIL ENGINEER AND AS APPROVED BY THE CITY ENGINEER.
2. 6' BOTH SIDES: (COMMERCIAL AREAS MAY REQUIRE UP TO 10' WIDTHS AT THE DISCRETION OF PUBLIC WORKS DIRECTOR).

CITY OF CASTLE ROCK			
MINOR ARTERIAL STREET SECTION			
APPROVED: BY CITY	07-20-20 DATE		DWG. NO. CR002ST
DATE: 9/19	DRWN: KAR	CHKD: CLR	SCALE: NONE

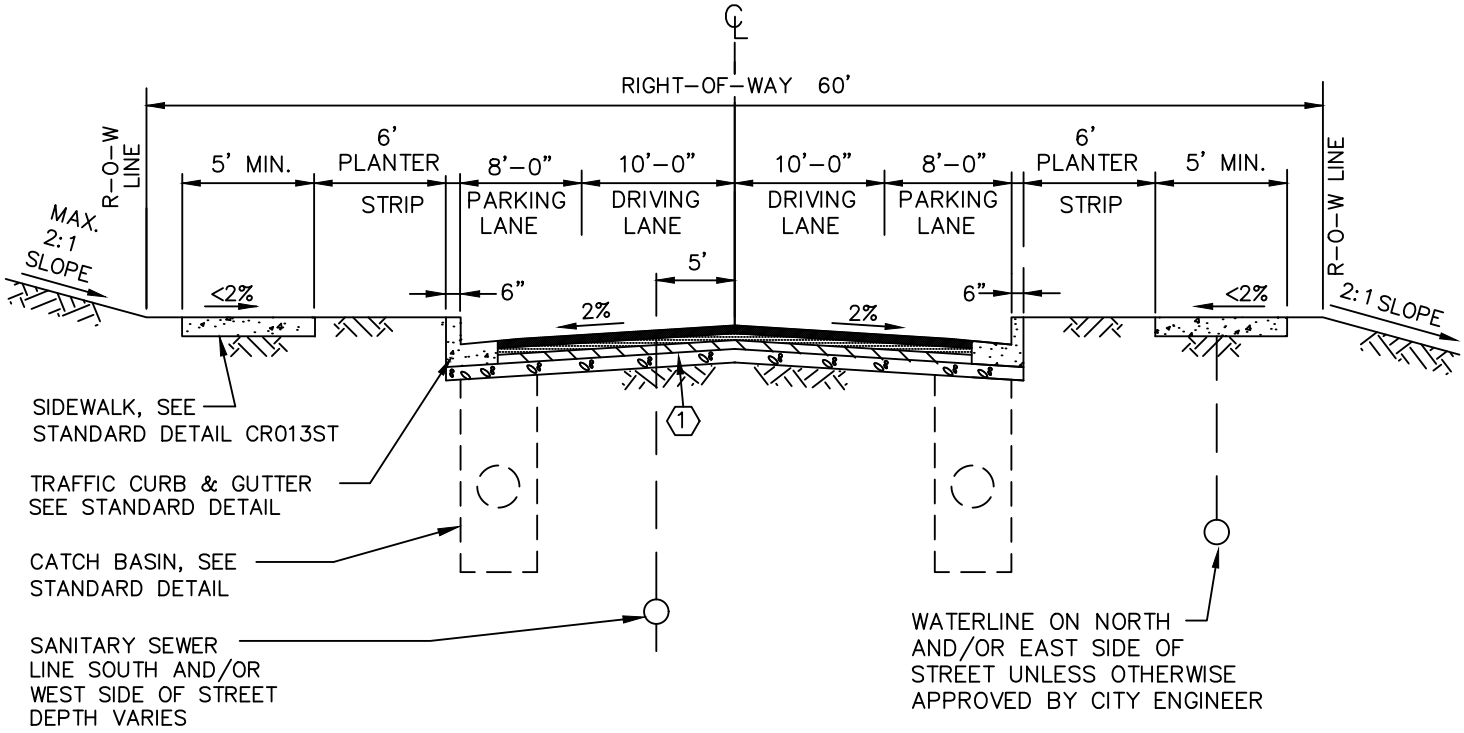

NOTE:

(1) PAVEMENT DESIGN BY CURRENT WASHINGTON STATE LICENSED CIVIL ENGINEER AND AS APPROVED BY THE CITY ENGINEER.

CITY OF CASTLE ROCK			
COLLECTOR STREET SECTION			
APPROVED: BY CITY	07-20-20 DATE		DWG. NO. CR003ST
DATE: 9/19	DRWN: KAR	CHKD: CLR	SCALE: NONE

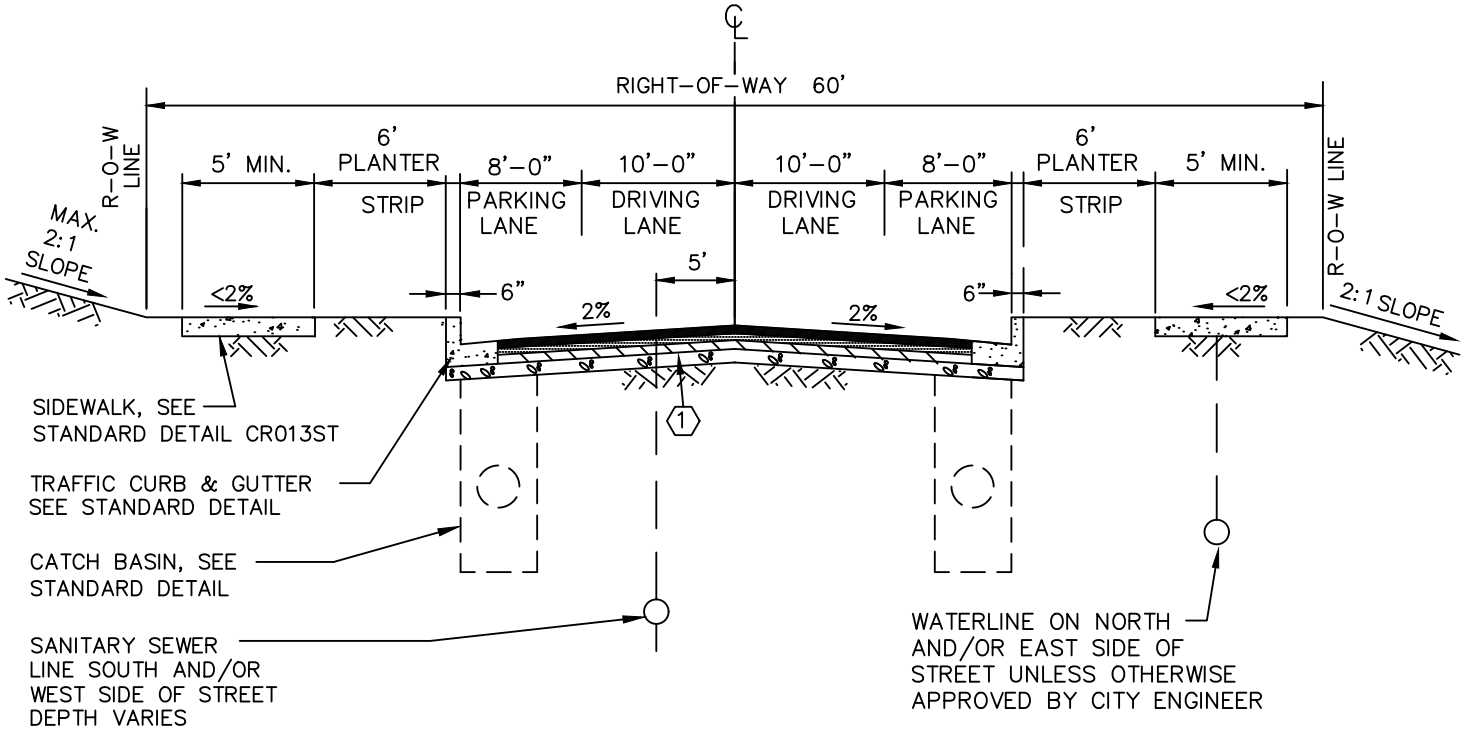

NOTE:

1. PAVEMENT DESIGN BY CURRENT WASHINGTON STATE LICENSED CIVIL ENGINEER AND AS APPROVED BY THE CITY ENGINEER.

2. UPON APPROVAL BY THE CITY, RESIDENTIAL LOCAL STREETS MAY BE REDUCED IN WIDTH TO 28 FEET, WITH ONLY ONE PARKING LANE, IF DEVELOPMENTS PROVIDE AT LEAST 4 OFF STREET PARKING SPACES FOR EACH LOT.

CITY OF CASTLE ROCK			
LOCAL ACCESS STREET SECTION			
APPROVED: BY CITY		07–20–20 DATE	DWG. NO. CR005ST
DATE: 9/19	DRWN: KAR	CHKD: CLR	SCALE: NONE

NOTE:
MINIMUM 6" CRUSHED SURFACING AND 2.5" HMA

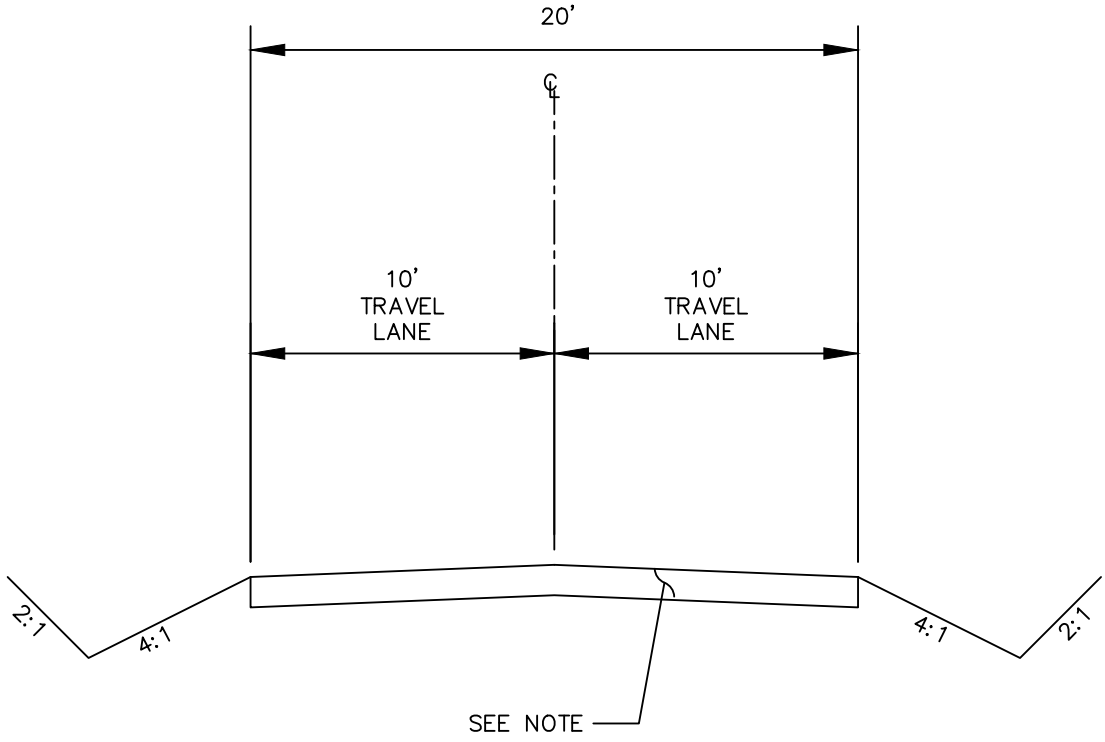

PRIVATE ROAD
N.T.S.

CITY OF CASTLE ROCK			
PRIVATE ROAD			
APPROVED: BY CITY	07-20-20 DATE		DWG. NO. CR007ST
DATE: 07/20	DRWN: KAR	CHKD: CLR	SCALE: NONE

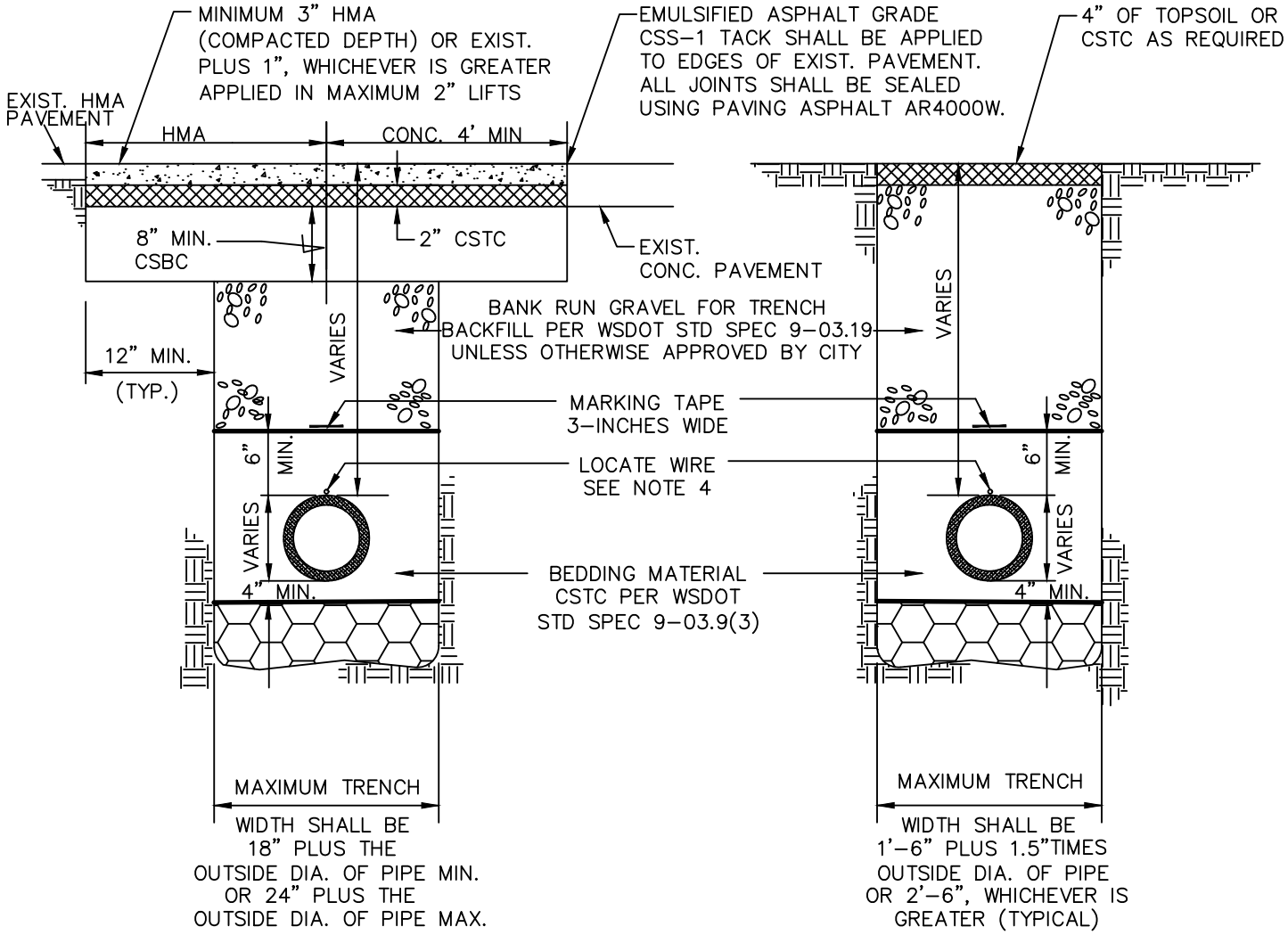

NOTES:

1. CSTC & CSBC MATERIAL SHALL BE COMPACTED IN 6-INCH MAXIMUM LIFTS TO 95% DENSITY.
2. COMPACTION: BEDDING SHALL BE COMPACTED TO 95% MAX. AS DETERMINED BY ASTM D1557. BACKFILL SHALL BE COMPACTED TO 95% IN THE ROADWAY PRISM, AND 85% OUTSIDE ROADWAY PRISM AS DETERMINED BY ASTM D1557.
3. ALL MATERIALS, WORKMANSHIP, AND INSTALLATION SHALL BE IN CONFORMANCE WITH THE STANDARD SPECIFICATIONS FOR ROAD, BRIDGE AND MUNICIPAL CONSTRUCTION AS AMENDED BY CITY STANDARDS.
4. SEE SPECIFIC UTILITY TRENCH DETAIL FOR WIRE TYPE AND COLOR.
5. WHEN CUT LINE IS LESS THAN THREE FEET FROM A CUT LINE, CURB, JOINT LINE, OR PAVEMENT EDGE, THE EXISTING PAVEMENT SHALL BE REMOVED TO THE CUT LINE.

CITY OF CASTLE ROCK			
TRENCH – PAVEMENT RESTORATION			
APPROVED: BY CITY	07-20-20 DATE		DWG. NO. CR008ST
DATE: 06/20	DRWN: KAR	CHKD: CLR	SCALE: NONE

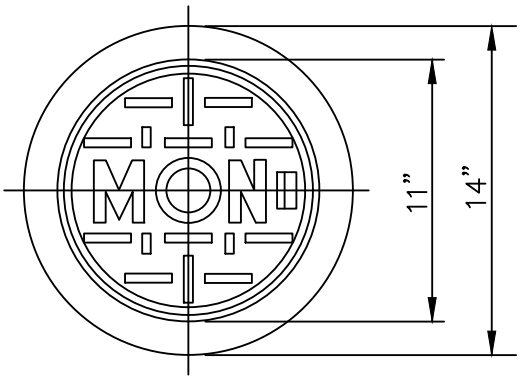

MONUMENT COVER

NOTES:

1. MACHINE BEARING FACES OF COVER AND CASE TO INSURE POSITIVE FIT.

2. MATERIAL SHALL CONFORM TO THE MOST CURRENT "STANDARD SPECIFICATIONS FOR ROAD, BRIDGE AND MUNICIPAL CONSTRUCTION" PREPARED BY THE WASHINGTON STATE DEPT. OF TRANSPORTATION.

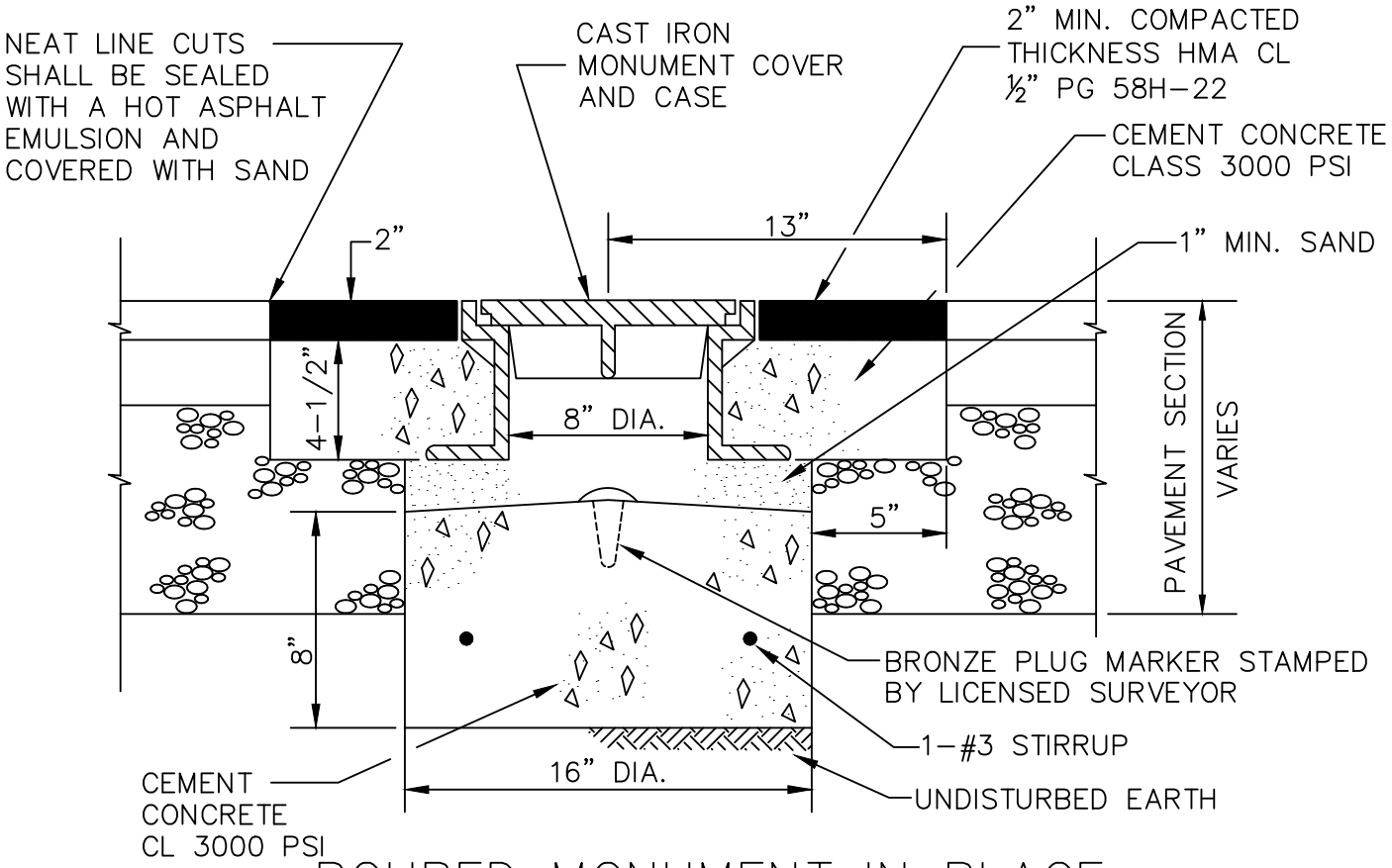

POURED MONUMENT IN PLACE

CITY OF CASTLE ROCK			
POURED MONUMENT IN PLACE			
APPROVED: BY CITY	07-20-20 DATE		DWG. NO. CR009ST
DATE: 9/16	DRWN: KAR	CHKD: CLR	SCALE: NONE

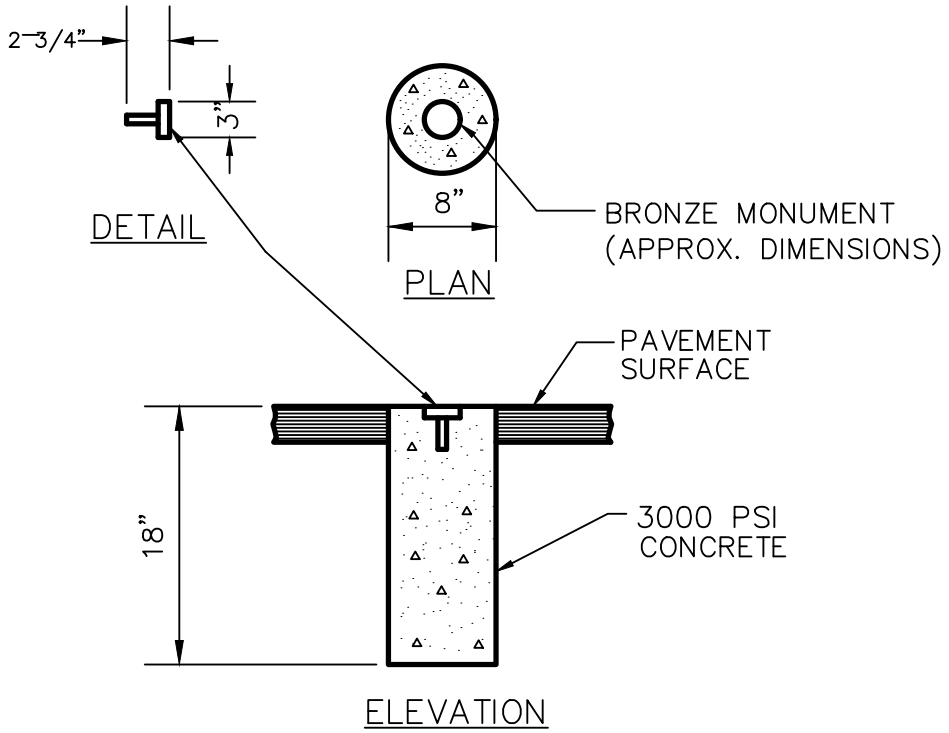

NOTE:

1. THE HOLE FOR THE MONUMENT SHALL BE CUT AFTER THE NEW PAVEMENT HAS BEEN CONSTRUCTED. THE UPPER 3" OF THE MONUMENT ENCASEMENT SHALL BE SHAPED TO A TRUE DIAMETER OF 8-INCH. CLASS 3000 CONCRETE SHALL BE USED FOR ENCASEMENT. THE BRONZE MONUMENT WILL BE SET SIMULTANEOUSLY WITH THE POURING OF CONCRETE IN THE ENCASEMENT.
2. SURFACE MONUMENT WILL GENERALLY NOT BE ACCEPTED BUT WILL BE EVALUATED, UPON REQUEST, ON A CASE BY CASE BASIS.

CITY OF CASTLE ROCK			
SURFACE MONUMENT			
APPROVED: BY CITY	07-20-20 DATE		DWG. NO. CR010ST
DATE: 9/19	DRWN: KAR	CHKD: CLR	SCALE: NONE

STOP OR YIELD CONTROLLED INTERSECTIONS

EXAMPLE: MAJOR STREET SPEED LIMIT = 25 M.P.H.

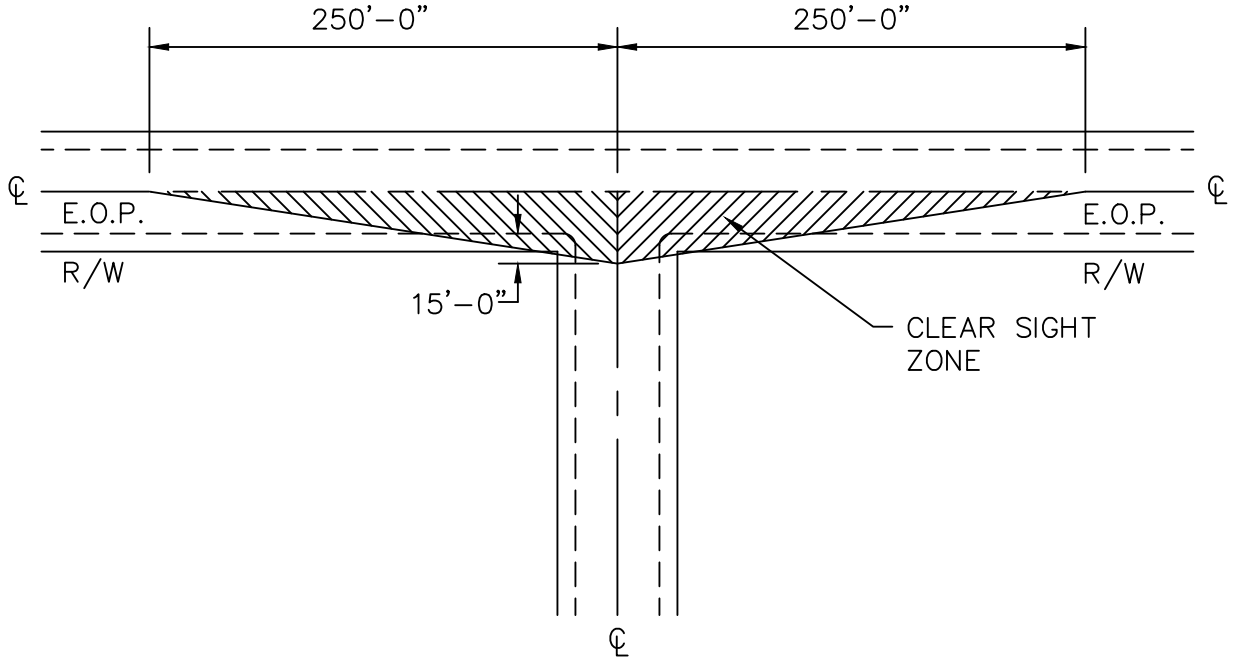

UNCONTROLLED INTERSECTIONS

EXAMPLE: MAJOR STREET SPEED LIMIT = 30 M.P.H.
MINOR STREET SPEED LIMIT = 20 M.P.H.

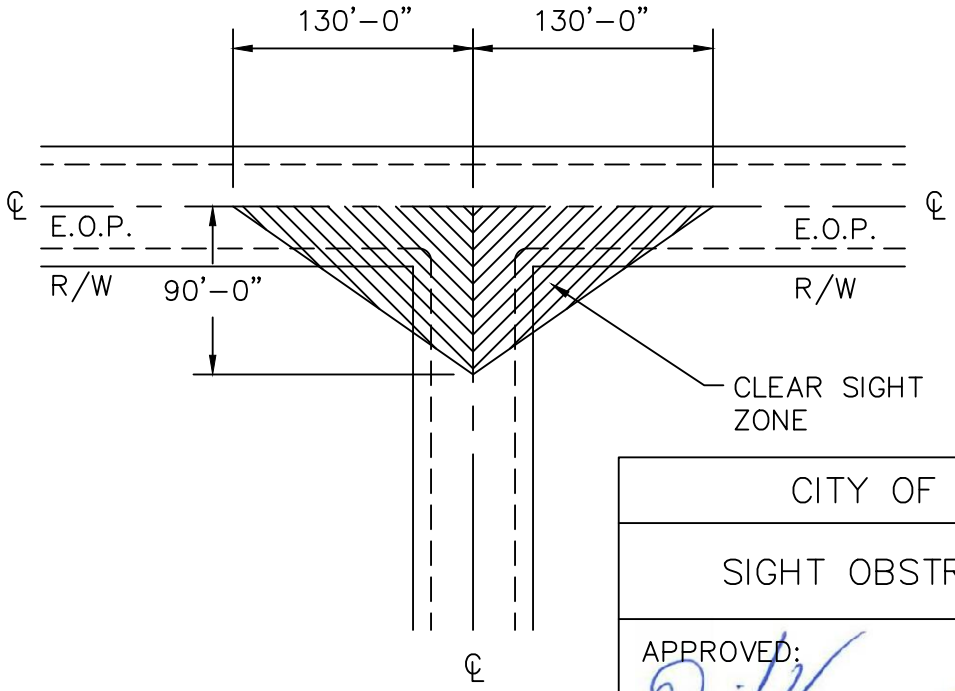

CITY OF CASTLE ROCK			
SIGHT OBSTRUCTION DETAIL			
APPROVED: BY CITY	07-20-20 DATE		DWG. NO. CR011ST
DATE: 9/19	DRWN: KAR	CHKD: CLR	SCALE: NONE

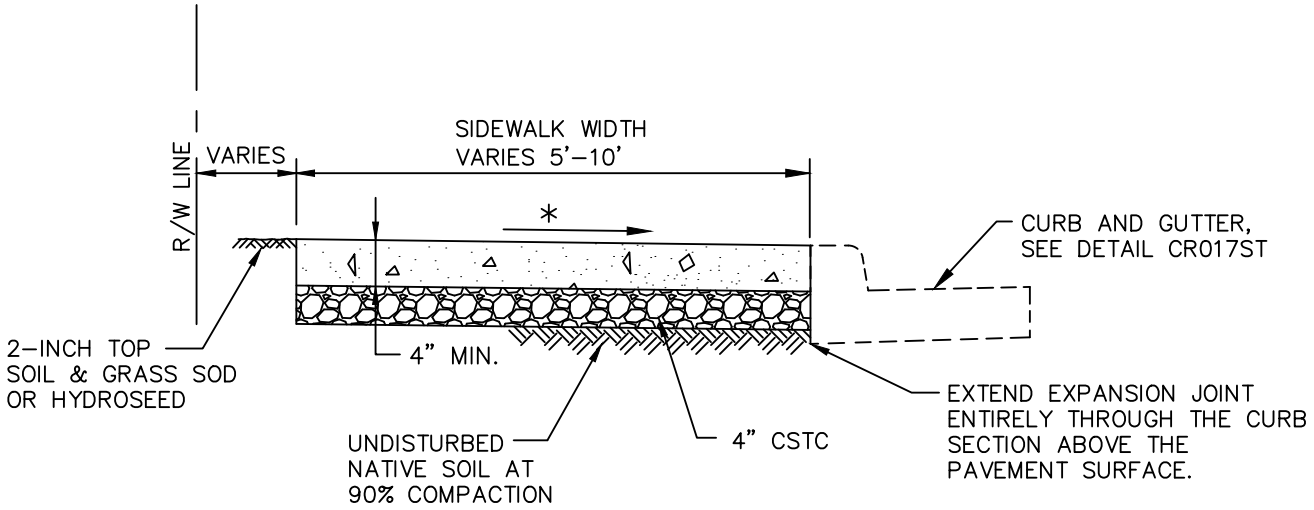

SECTION

* 1.5% OR FLATTER RECOMMENDED FOR DESIGN/FORMWORK (2% MAX)

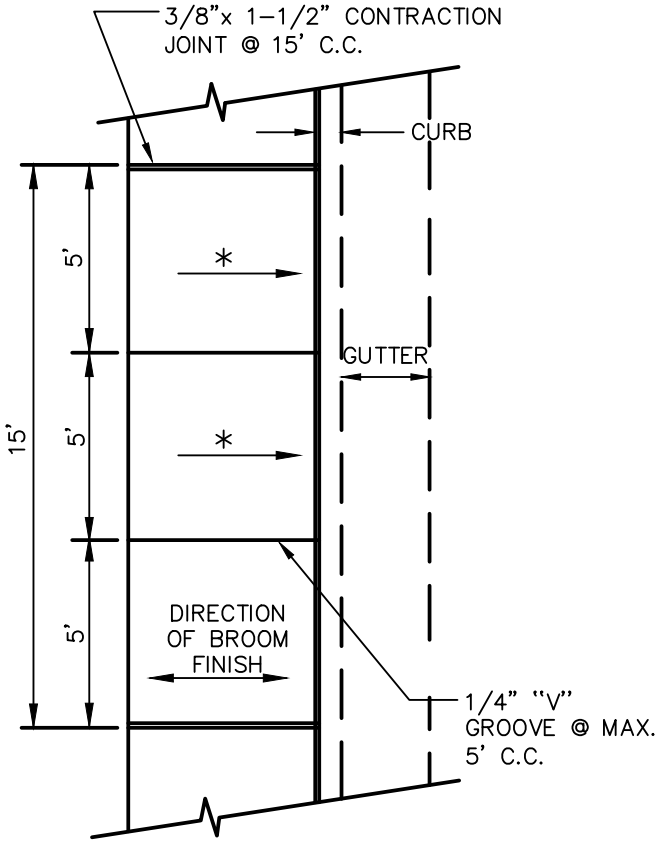

PLAN

SIDEWALK WITHOUT PLANTING STRIP

MINIMUM SIDEWALK WIDTHS

5' MINIMUM, 10' MAXIMUM
SEE DESIGN STANDARDS

NOTES:

1. THRU JOINTS AND CONTRACTION JOINTS SHALL BE AS SHOWN ABOVE. THRU JOINTS SHALL ALSO BE PLACED IN THE SIDEWALK SECTION AT DRIVE–WAY AND ALLEY RETURNS. ALL JOINTS SHALL BE CLEAN AND EDGED WITH AN EDGE HAVING 1/4" RADIUS. JOINTS SHALL BE FLUSH WITH THE FINISHED SURFACE.

2. ALL UTILITY POLES, METER BOXES, ETC. IN SIDEWALK AREAS SHALL HAVE 3/8" JOINT MATERIAL (FULL DEPTH) PLACED AROUND THEM BEFORE PLACING CONCRETE.

3. PREMOLDED JOINT FILLER SHALL BE 3/8"x 2" ASPHALT MASTIC MATERIAL.

4. FORMS SHALL BE EITHER WOOD OR STEEL AND SHALL MEET ALL REQUIREMENTS OF THESE SPECIFICATIONS.

5. CONCRETE SHALL BE CLASS 3000 PSI.

CITY OF CASTLE ROCK			
SIDEWALK WITHOUT PLANTING STRIP			
APPROVED: BY CITY	07–20–20 DATE		DWG. NO. CR012ST
DATE: 9/19	DRWN: KAR	CHKD: CLR	SCALE: NONE

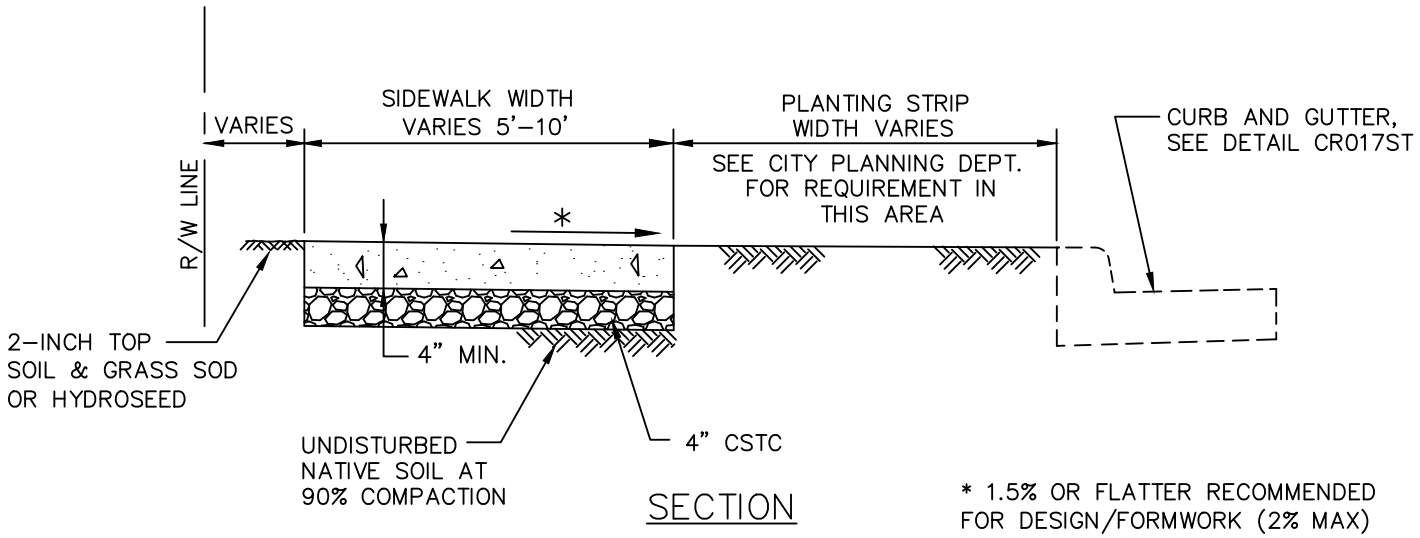

SECTION

* 1.5% OR FLATTER RECOMMENDED FOR DESIGN/FORMWORK (2% MAX)

** 7.5% OR FLATTER RECOMMENDED FOR DESIGN/FORMWORK (8.3% MAX)

MINIMUM SIDEWALK WIDTHS

5' MINIMUM, 10' MAXIMUM
SEE DESIGN STANDARDS

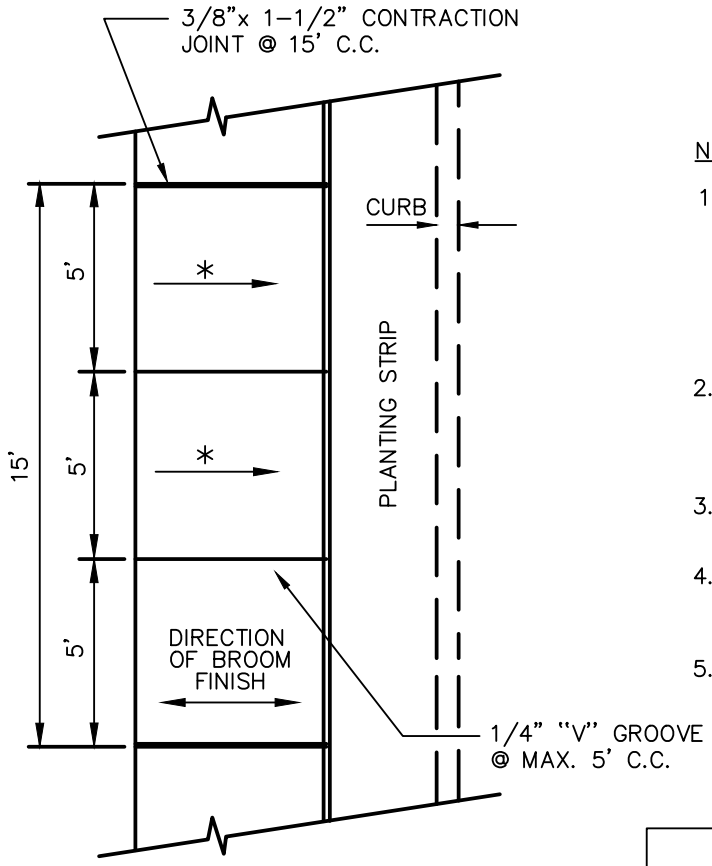

NOTES:

1. THRU JOINTS AND DUMMY JOINTS SHALL BE AS SHOWN ABOVE. THRU JOINTS SHALL ALSO BE PLACED IN THE SIDEWALK SECTION AT DRIVE–WAY AND ALLEY RETURNS. ALL JOINTS SHALL BE CLEAN AND EDGED WITH AN EDGE HAVING 1/4" RADIUS. JOINTS SHALL BE FLUSH WITH THE FINISHED SURFACE.
2. ALL UTILITY POLES, METER BOXES, ETC. IN SIDEWALK AREAS SHALL HAVE 3/16" JOINT MATERIAL (FULL DEPTH) PLACED AROUND THEM BEFORE PLACING CONCRETE.
3. PREMOLDED JOINT FILLER SHALL BE 3/16" x 2" ASPHALT SATURATED FELT OR PAPER.
4. FORMS SHALL BE EITHER WOOD OR STEEL AND SHALL MEET ALL REQUIREMENTS OF THESE SPECIFICATIONS.
5. CONCRETE SHALL BE CLASS 3000 PSI

PLAN

SIDEWALK WITH PLANTING STRIP

CITY OF CASTLE ROCK			
SIDEWALK WITH PLANTING STRIP			
APPROVED: BY CITY	07–20–20 DATE		DWG. NO. CR013ST
DATE: 9/19	DRWN: KAR	CHKD: CLR	SCALE: NONE

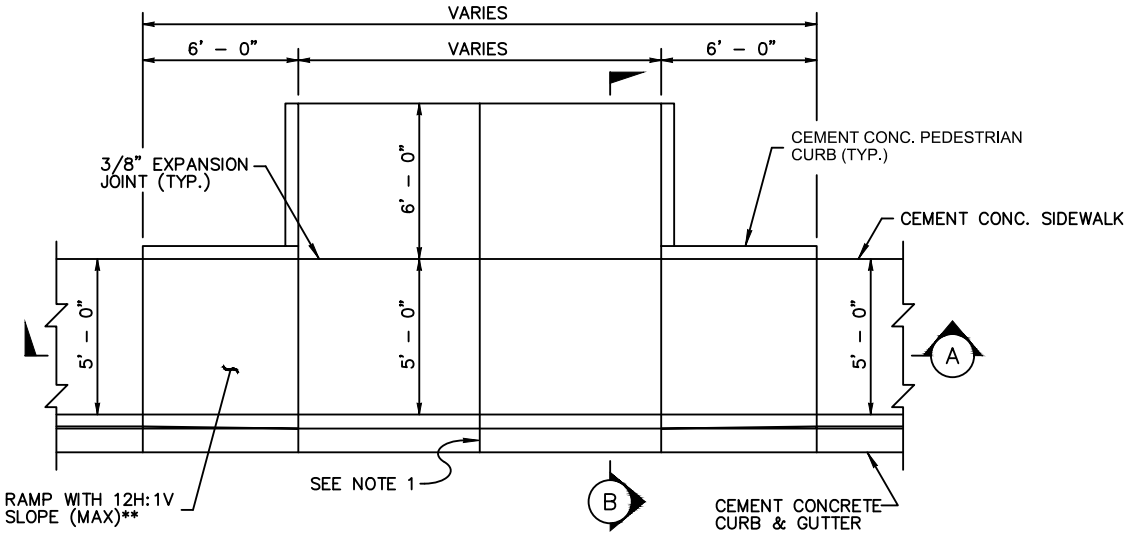

PLAN VIEW

* 1.5% OR FLATTER RECOMMENDED FOR DESIGN/FORMWORK (2% MAX)

** 7.5% OR FLATTER RECOMMENDED FOR DESIGN/FORMWORK (8.3% MAX)

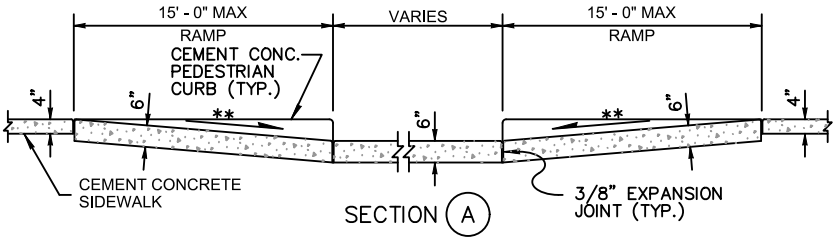

SECTION A

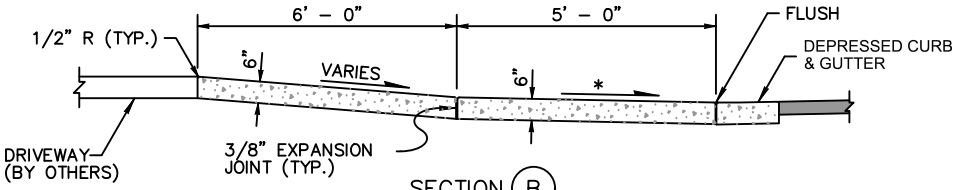

SECTION B

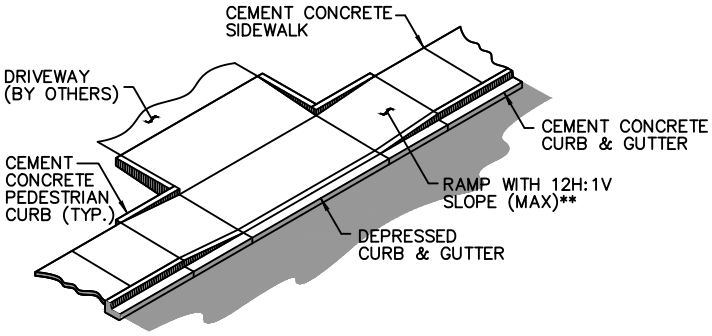

NOTES:

1. WHEN THE DRIVEWAY WIDTH EXCEEDS 15 FEET, CONSTRUCT A FULL DEPTH EXPANSION JOINT WITH 3/8" JOINT FILLER ALONG THE DRIVEWAY CENTERLINE. CONSTRUCT EXPANSION JOINTS PARALLEL WITH THE CENTER–LINE AS REQUIRED AT 15' MAXIMUM SPACING WHEN DRIVEWAY WIDTHS EXCEED 30'.
2. SEE STANDARD PLAN CR012ST & CR013ST FOR SIDEWALK DETAILS.
3. CURB AND GUTTER SHOWN; SEE THE CONTRACT PLANS FOR THE CURB DESIGN SPECIFIED. SEE STANDARD PLAN CR017ST FOR CURB DETAILS.
4. AVOID PLACING DRAINAGE STRUCTURES, JUNCTION BOXES OR OTHER OBSTRUCTIONS IN FRONT OF DRIVEWAY ENTRANCES.
5. WHERE "GRADE BREAK" IS CALLED OUT, THE ENTIRE LENGTH OF THE LINE BETWEEN THE TWO ADJACENT SURFACE PLANES SHALL BE FLUSH.
6. THE PEDESTRIAN RAMP LENGTH IS NOT REQUIRED TO EXCEED 15 FEET (UNLESS OTHERWISE SHOWN IN THE CONTRACT PLANS). WHEN APPLYING THE 15–FOOT MAX. LENGTH (MEASURED FROM BACK OF SIDEWALK) THE RUNNING SLOPE OF THE PEDESTRIAN RAMP IS ALLOWED TO EXCEED 8.3%. USE A SINGLE CONSTANT SLOPE FROM BOTTOM OF RAMP TO TOP OF RAMP TO MATCH INTO THE SIDEWALK OVER A HORIZONTAL DISTANCE OF 15 FEET.

CITY OF CASTLE ROCK			
CEMENT CONCRETE DRIVEWAY TYPE 1			
APPROVED: BY CITY	07–20–20 DATE		DWG. NO. CR014STA
DATE: 9/19	DRWN: KAR	CHKD: CLR	SCALE: NONE

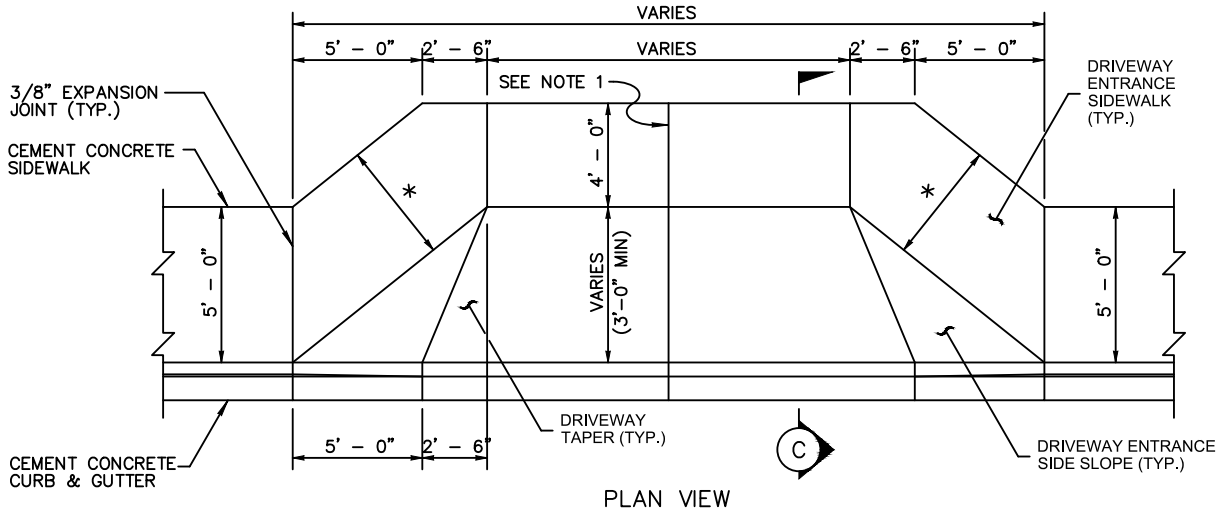

PLAN VIEW

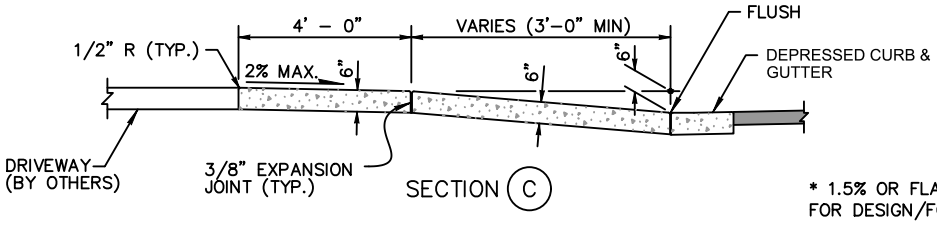

SECTION C

* 1.5% OR FLATTER RECOMMENDED FOR DESIGN/FORMWORK (2% MAX)

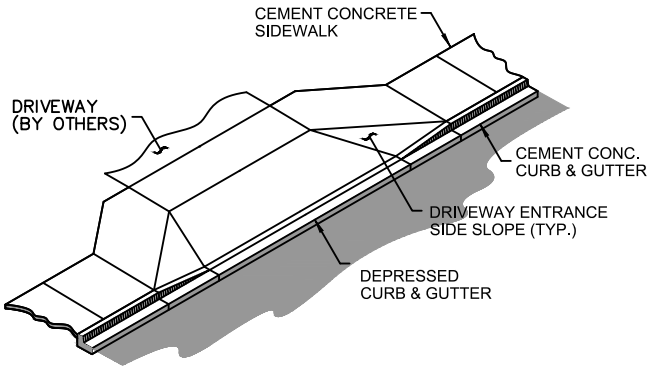

NOTES:

1. WHEN THE DRIVEWAY WIDTH EXCEEDS 15 FEET, CONSTRUCT A FULL DEPTH EXPANSION JOINT WITH 3/8" JOINT FILLER ALONG THE DRIVEWAY CENTERLINE. CONSTRUCT EXPANSION JOINTS PARALLEL WITH THE CENTER–LINE AS REQUIRED AT 15' MAXIMUM SPACING WHEN DRIVEWAY WIDTHS EXCEED 30'.
2. SEE STANDARD PLAN CR012ST & CR013ST FOR SIDEWALK DETAILS.
3. CURB AND GUTTER SHOWN; SEE THE CONTRACT PLANS FOR THE CURB DESIGN SPECIFIED. SEE STANDARD PLAN CR017ST FOR CURB DETAILS.
4. AVOID PLACING DRAINAGE STRUCTURES, JUNCTION BOXES OR OTHER OBSTRUCTIONS IN FRONT OF DRIVEWAY ENTRANCES.
5. WHERE "GRADE BREAK" IS CALLED OUT, THE ENTIRE LENGTH OF THE LINE BETWEEN THE TWO ADJACENT SURFACE PLANES SHALL BE FLUSH.
6. THE PEDESTRIAN RAMP LENGTH IS NOT REQUIRED TO EXCEED 15 FEET (UNLESS OTHERWISE SHOWN IN THE CONTRACT PLANS). WHEN APPLYING THE 15–FOOT MAX. LENGTH (MEASURED FROM BACK OF SIDEWALK) THE RUNNING SLOPE OF THE PEDESTRIAN RAMP IS ALLOWED TO EXCEED 8.3%. USE A SINGLE CONSTANT SLOPE FROM BOTTOM OF RAMP TO TOP OF RAMP TO MATCH INTO THE SIDEWALK OVER A HORIZONTAL DISTANCE OF 15 FEET.

CITY OF CASTLE ROCK			
CEMENT CONCRETE DRIVEWAY TYPE 2			
APPROVED: BY CITY		07–20–20 DATE	DWG. NO. CR014STB
DATE: 9/19	DRWN: KAR	CHKD: CLR	SCALE: NONE

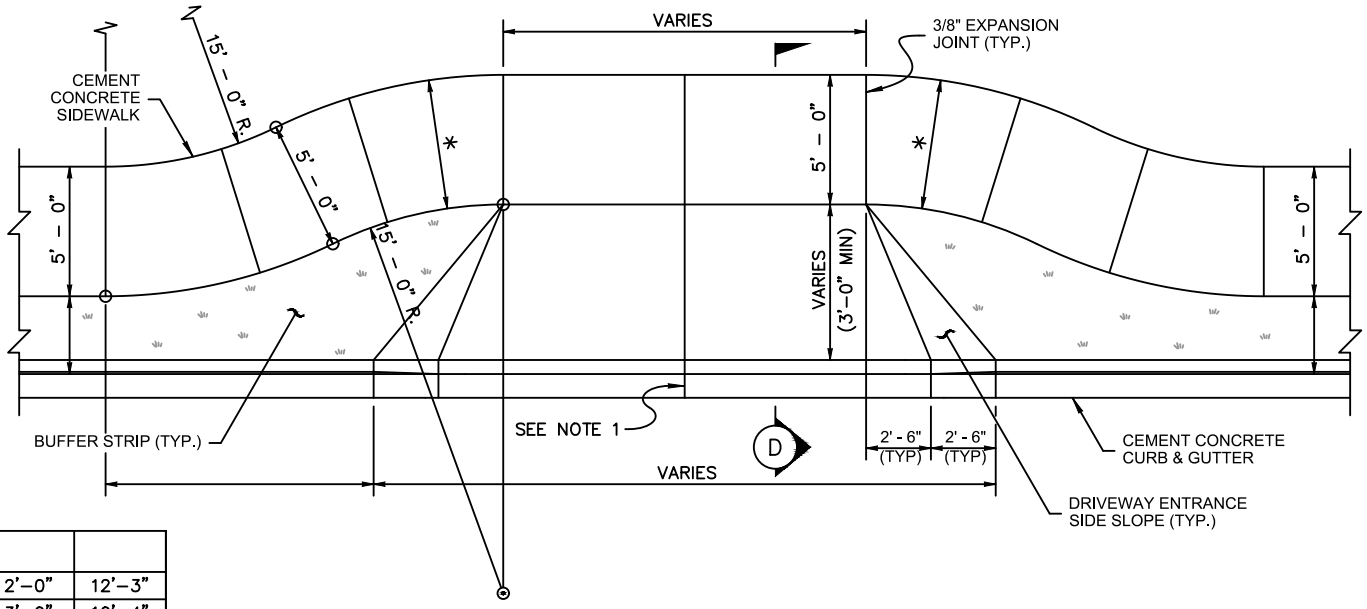

2'–0"	12'–3"
3'–0"	10'–4"
4'–0"	8'–1"
5'–0"	5'–3 1/4"
6'–0"	1'–1 3/4"

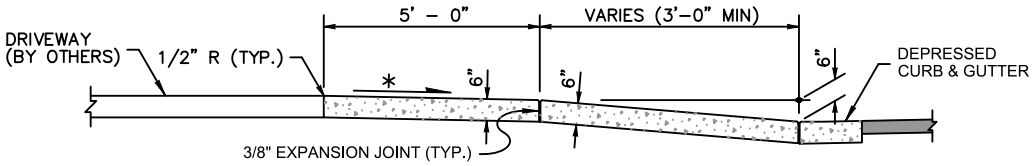

SECTION D

* 1.5% OR FLATTER RECOMMENDED FOR DESIGN/FORMWORK (2% MAX)

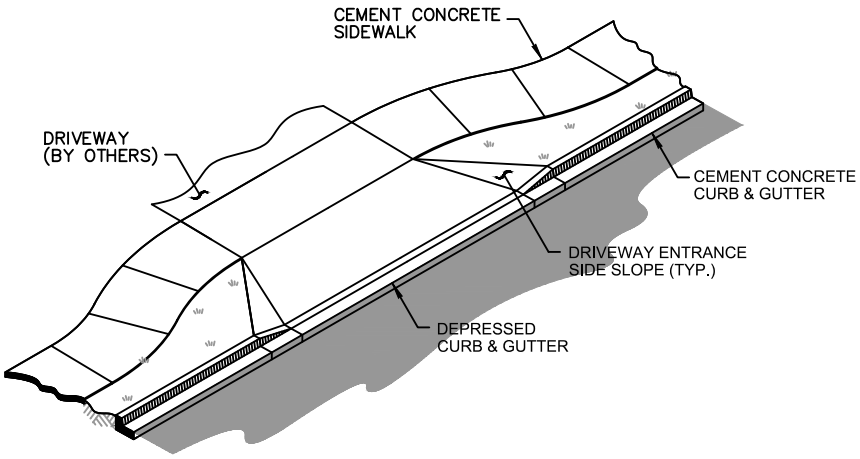

NOTES:

1. WHEN THE DRIVEWAY WIDTH EXCEEDS 15 FEET, CONSTRUCT A FULL DEPTH EXPANSION JOINT WITH 3/8" JOINT FILLER ALONG THE DRIVEWAY CENTERLINE. CONSTRUCT EXPANSION JOINTS PARALLEL WITH THE CENTER–LINE AS REQUIRED AT 15' MAXIMUM SPACING WHEN DRIVEWAY WIDTHS EXCEED 30'.
2. SEE STANDARD PLAN CR012ST & CR013ST FOR SIDEWALK DETAILS.
3. CURB AND GUTTER SHOWN; SEE THE CONTRACT PLANS FOR THE CURB DESIGN SPECIFIED. SEE STANDARD PLAN CR017ST FOR CURB DETAILS.
4. AVOID PLACING DRAINAGE STRUCTURES, JUNCTION BOXES OR OTHER OBSTRUCTIONS IN FRONT OF DRIVEWAY ENTRANCES.
5. WHERE "GRADE BREAK" IS CALLED OUT, THE ENTIRE LENGTH OF THE LINE BETWEEN THE TWO ADJACENT SURFACE PLANES SHALL BE FLUSH.
6. THE PEDESTRIAN RAMP LENGTH IS NOT REQUIRED TO EXCEED 15 FEET (UNLESS OTHERWISE SHOWN IN THE CONTRACT PLANS). WHEN APPLYING THE 15–FOOT MAX. LENGTH (MEASURED FROM BACK OF SIDEWALK) THE RUNNING SLOPE OF THE PEDESTRIAN RAMP IS ALLOWED TO EXCEED 8.3%. USE A SINGLE CONSTANT SLOPE FROM BOTTOM OF RAMP TO TOP OF RAMP TO MATCH INTO THE SIDEWALK OVER A HORIZONTAL DISTANCE OF 15 FEET.

CITY OF CASTLE ROCK			
CEMENT CONCRETE DRIVEWAY TYPE 3			
APPROVED: BY CITY	07–20–20 DATE		DWG. NO. CR014STC
DATE: 9/19	DRWN: KAR	CHKD: CLR	SCALE: NONE

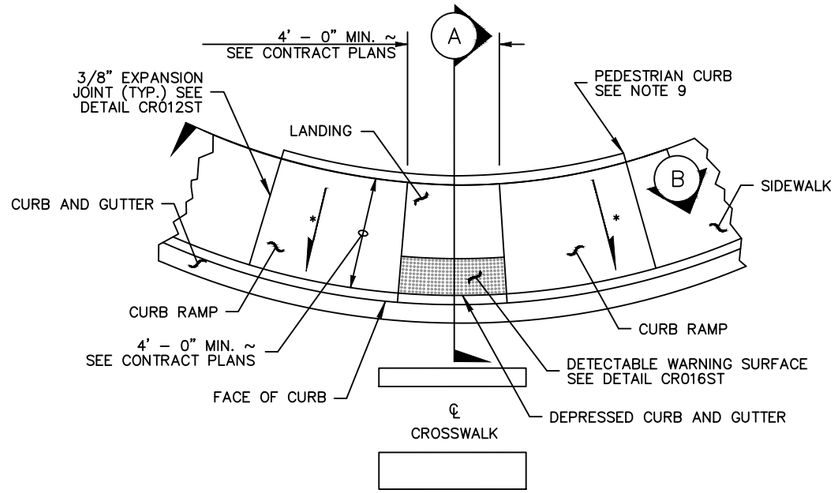

PLAN VIEW
TYPE PARALLEL A

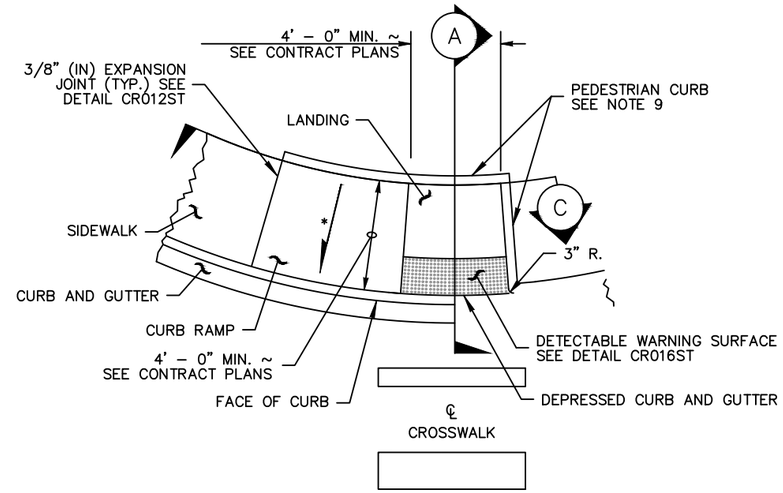

PLAN VIEW
TYPE PARALLEL B

1 CONTRACTION JOINT (TYP.) ~ SEE DETAIL CR012ST
FOR CURB RAMP LENGTHS GREATER THAN 8' – 0"PROVIDE
CONTRACTION JOINT EQUALLY SPACED 4' – 0" MIN. OC.

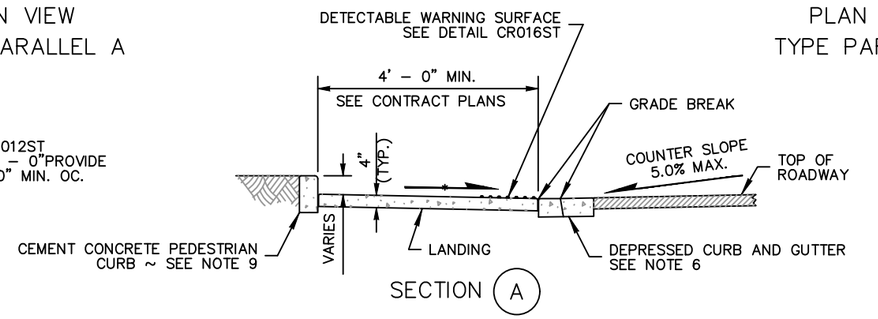

SECTION A

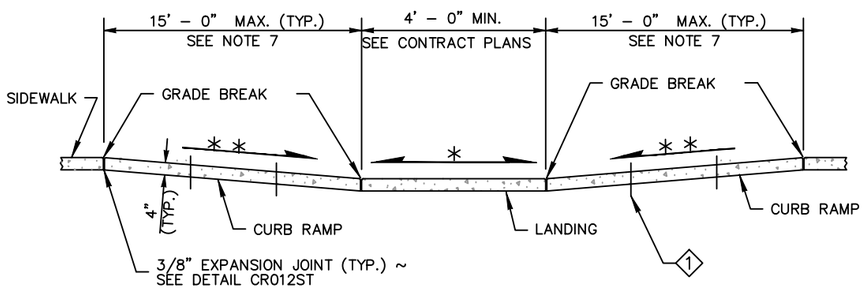

SECTION B

(ALONG INSIDE RADIUS AT BACK OF WALKWAY)

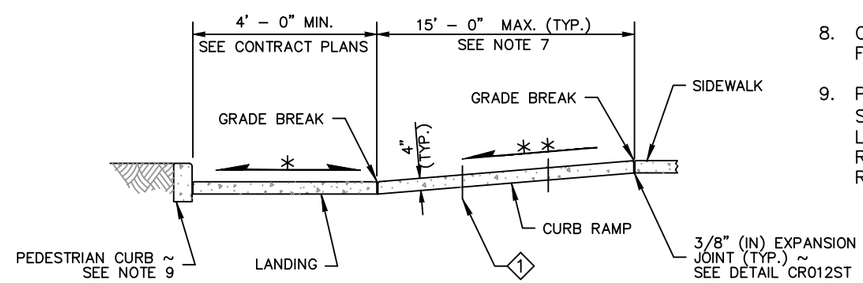

SECTION C

(ALONG INSIDE RADIUS AT BACK OF WALKWAY)

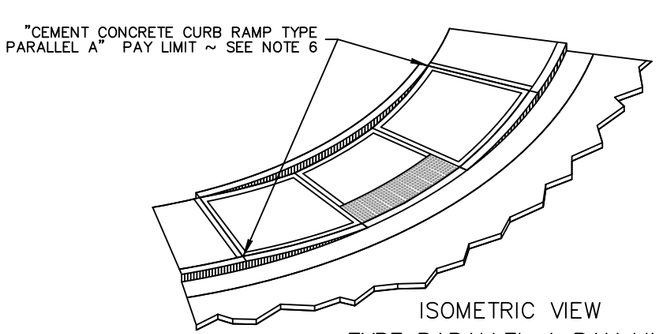

ISOMETRIC VIEW
TYPE PARALLEL A PAY LIMIT

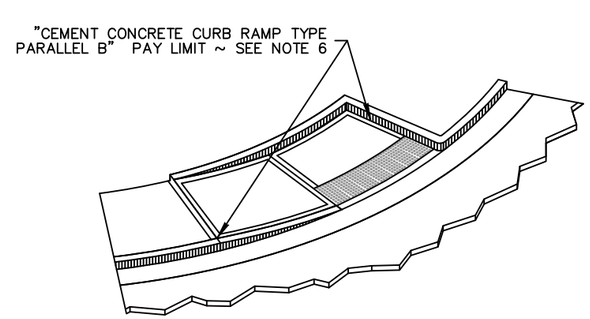

ISOMETRIC VIEW
TYPE PARALLEL B PAY LIMIT

NOTES

1. AT MARKED CROSSWALKS, THE CONNECTION BETWEEN THE LANDING AND THE ROADWAY MUST BE CONTAINED WITHIN THE WIDTH OF THE CROSSWALK MARKINGS.
2. WHERE "GRADE BREAK" IS CALLED OUT, THE ENTIRE LENGTH OF THE GRADE BREAK BETWEEN THE TWO ADJACENT SURFACE PLANES SHALL BE FLUSH.
3. DO NOT PLACE GRATINGS, JUNCTION BOXES, ACCESS COVERS, OR OTHER APPURTENANCES ON ANY PART OF THE CURB RAMP OR LANDING, OR IN THE DEPRESSED CURB AND GUTTER WHERE THE LANDING CONNECTS TO THE ROADWAY.
4. SEE CONTRACT PLANS FOR THE CURB DESIGN SPECIFIED. SEE DETAIL CR017ST FOR TRAFFIC CURB, TRAFFIC CURB AND GUTTER.
5. SEE DETAIL CR012ST & CR013ST FOR CEMENT CONCRETE SIDEWALK DETAILS. SEE CONTRACT PLANS FOR WIDTH AND PLACEMENT OF SIDEWALK.
6. THE BID ITEM "CEMENT CONCRETE CURB RAMP TYPE __" DOES NOT INCLUDE THE ADJACENT CURB, CURB AND GUTTER, DEPRESSED CURB AND GUTTER, PEDESTRIAN CURB, OR SIDEWALKS.
7. THE CURB RAMP LENGTH IS NOT REQUIRED TO EXCEED 15 FEET (UNLESS OTHERWISE SHOWN IN THE CONTRACT PLANS). WHEN APPLYING THE 15–FOOT MAX. LENGTH, THE RUNNING SLOPE OF THE CURB RAMP IS ALLOWED TO EXCEED 8.3%. USE A SINGLE CONSTANT SLOPE FROM BOTTOM OF RAMP TO TOP OF RAMP TO MATCH INTO THE SIDEWALK OVER A HORIZONTAL DISTANCE OF 15 FEET. DO NOT INCLUDE ABUTTING LANDING(S) IN THE 15–FOOT MAX. MEASUREMENT. WHEN A RAMP IS CONSTRUCTED ON A RADIUS, THE 15–FOOT MAX. LENGTH IS MEASURED ON THE INSIDE RADIUS ALONG THE BACK OF THE WALKWAY.
8. CURB RAMPS AND LANDINGS SHALL RECEIVE A BROOM FINISH. SEE WSDOT STANDARD SPECIFICATIONS 8–14.
9. PEDESTRIAN CURB MAY BE OMITTED IF THE GROUND SURFACE AT THE BACK OF THE CURB RAMP AND/OR LANDING WILL BE AT THE SAME ELEVATION AS THE CURB RAMP OR LANDING AND THERE WILL BE NO MATERIAL TO RETAIN.

LEGEND

⟷	SLOPE IN EITHER DIRECTION
*	1.5% OR FLATTER RECOMMENDED FOR DESIGN/FORMWORK (2% MAX.)
* *	7.5% OR FLATTER RECOMMENDED FOR DESIGN/FORMWORK (8.3% MAX.) ~ SEE NOTE 7

CITY OF CASTLE ROCK

PARALLEL CURB RAMP

APPROVED: BY CITY		07–20–20 DATE	DWG. NO. CR015STA
DATE: 9/19	DRWN: KAR	CHKD: CLR	SCALE: NONE

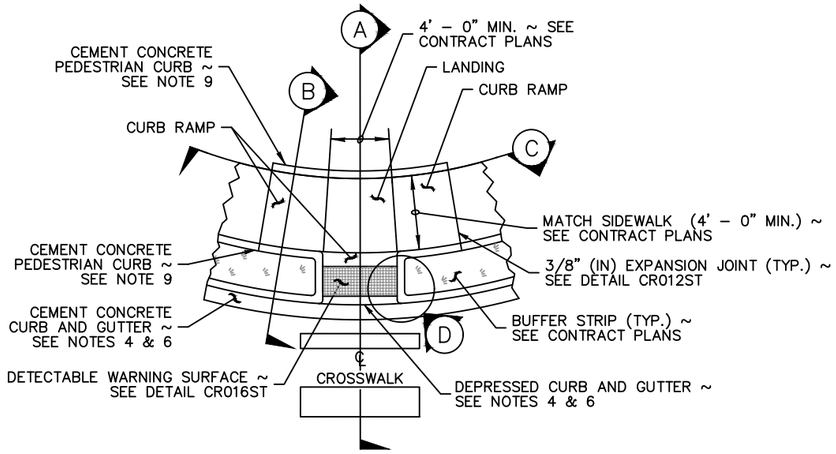

PLAN VIEW
TYPE COMBINATION
WITH BUFFER

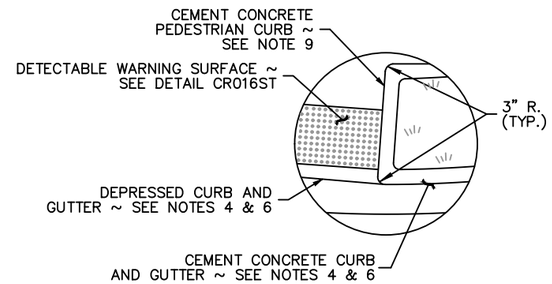

DETAIL (D)
CURB RADIUS DETAIL

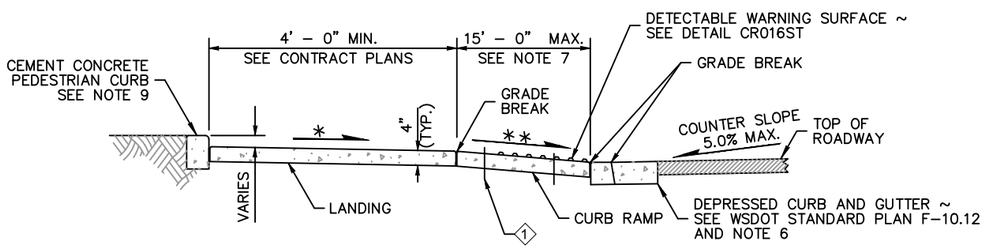

SECTION (A)

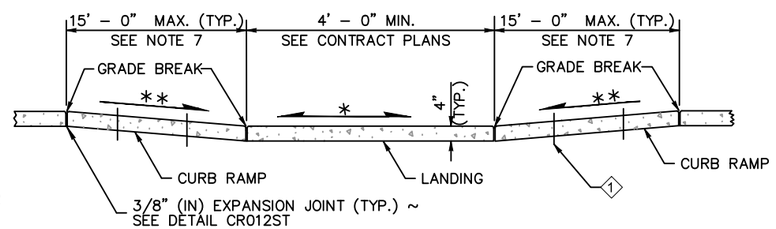

SECTION (C)
(ALONG INSIDE RADIUS AT BACK OF WALKWAY)

1 CONTRACTION JOINT (TYP.) ~ SEE WSDOT STANDARD PLAN F-30.10
FOR CURB RAMP LENGTHS GREATER THAN 8' – 0" PROVIDE
CONTRACTION JOINT EQUALLY SPACED 4' – 0" MIN. OC.

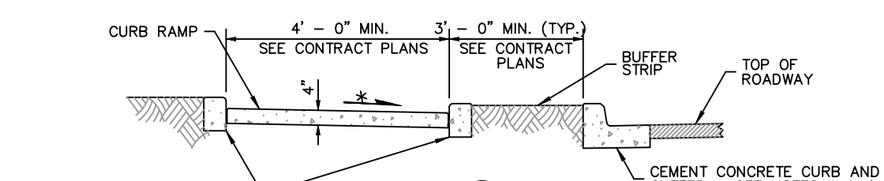

SECTION (B)

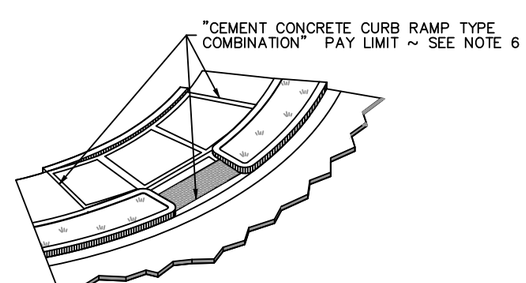

ISOMETRIC VIEW
TYPE COMBINATION
PAY LIMIT

NOTES:

1. AT MARKED CROSSWALKS, THE CONNECTION BETWEEN THE CURB RAMP AND THE ROADWAY MUST BE CONTAINED WITHIN THE WIDTH OF THE CROSSWALK MARKINGS.
2. WHERE "GRADE BREAK" IS CALLED OUT, THE ENTIRE LENGTH OF THE GRADE BREAK BETWEEN THE TWO ADJACENT SURFACE PLANES SHALL BE FLUSH.
3. DO NOT PLACE GRATINGS, JUNCTION BOXES, ACCESS COVERS, OR OTHER APPURTENANCES ON ANY PART OF THE CURB RAMP OR LANDING, OR IN THE DEPRESSED CURB AND GUTTER WHERE THE LANDING CONNECTS TO THE ROADWAY.
4. SEE CONTRACT PLANS FOR THE CURB DESIGN SPECIFIED. SEE DETAILS CR017ST FOR CURB, CURB & GUTTER, & WSDOT PLANS F-10.12 FOR DEPRESSED CURB, GUTTER & PEDESTRIAN CURB DETAILS.
5. SEE DETAILS CR012ST & CR013ST FOR CEMENT CONCRETE SIDEWALK DETAILS. SEE CONTRACT PLANS FOR WIDTH AND PLACEMENT OF SIDEWALK.
6. THE BID ITEM "CEMENT CONCRETE CURB RAMP TYPE __" DOES NOT INCLUDE THE ADJACENT CURB, CURB AND GUTTER, DEPRESSED CURB AND GUTTER, PEDESTRIAN CURB, OR SIDEWALKS.
7. THE CURB RAMP LENGTH IS NOT REQUIRED TO EXCEED 15 FEET (UNLESS OTHERWISE SHOWN IN THE CONTRACT PLANS). WHEN APPLYING THE 15-FOOT MAX. LENGTH, THE RUNNING SLOPE OF THE CURB RAMP IS ALLOWED TO EXCEED 8.3%. USE A SINGLE CONSTANT SLOPE FROM BOTTOM OF RAMP TO TOP OF RAMP TO MATCH INTO THE SIDEWALK OVER A HORIZONTAL DISTANCE OF 15 FEET. DO NOT INCLUDED THE ABUTTING LANDING IN THE 15-FOOT MAX. MEASUREMENT. WHEN A RAMP IS CONSTRUCTED ON A RADIUS, THE 15-FOOT MAX. LENGTH IS MEASURED ON THE INSIDE RADIUS ALONG THE BACK OF THE WALKWAY.
8. CURB RAMPS AND LANDINGS SHALL RECEIVE A BROOM FINISH. SEE WSDOT STANDARD SPECIFICATIONS 8-14.
9. PEDESTRIAN CURB MAY BE OMITTED IF THE GROUND SURFACE AT THE BACK OF THE CURB RAMP AND/OR LANDING WILL BE AT THE SAME ELEVATION AS THE CURB RAMP OR LANDING AND THERE WILL NOT BE MATERIAL TO RETAIN.

LEGEND

SLOPE IN EITHER DIRECTION

* 1.5 OR FLATTER RECOMMENDED FOR DESIGN/FORMWORK (2% MAX.)

** 7.5% OR FLATTER RECOMMENDED FOR DESIGN/FORMWORK (8.3% MAX.)

CITY OF CASTLE ROCK			
COMBINATION CURB RAMP			
APPROVED: BY CITY		07-20-20 DATE	DWG. NO. CR015STB
DATE: 9/19	DRWN: KAR	CHKD: CLR	SCALE: NONE

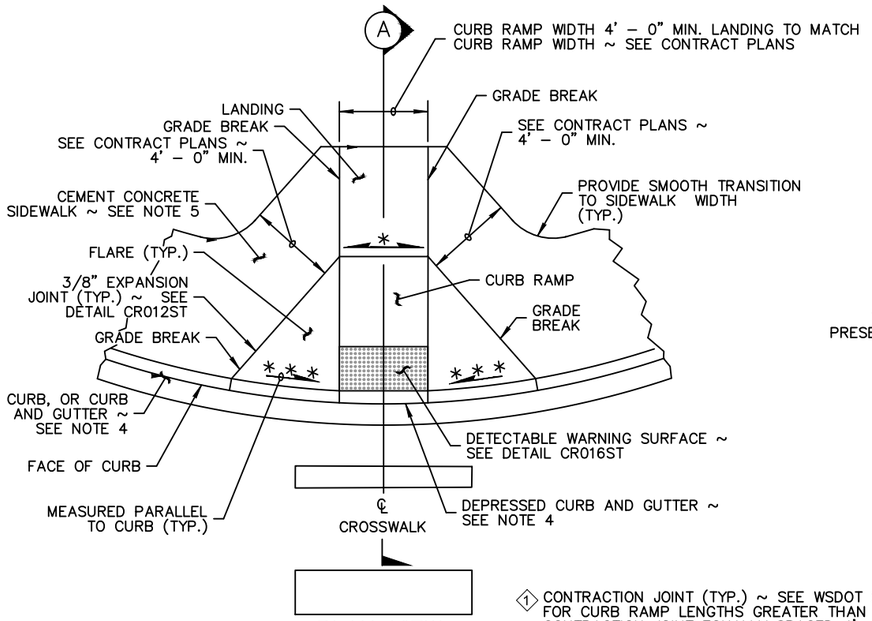

PLAN VIEW
TYPE PERPENDICULAR A

1 CONTRACTION JOINT (TYP.) ~ SEE WSDOT STANDARD PLAN F-30.10 FOR CURB RAMP LENGTHS GREATER THAN 8' – 0" PROVIDE CONTRACTION JOINT EQUALLY SPACED 4' – 0" MIN. OC.

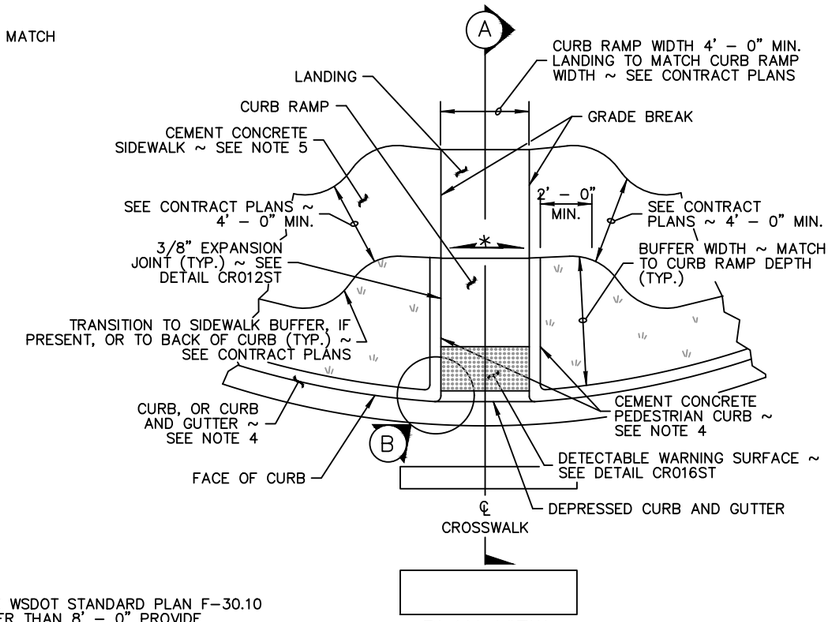

PLAN VIEW
TYPE PERPENDICULAR B
(SHOWN WITH BUFFER)

NOTES

1. AT MARKED CROSSWALKS, THE CONNECTION BETWEEN THE CURB RAMP AND THE ROADWAY MUST BE CONTAINED WITHIN THE WIDTH OF THE CROSSWALK MARKINGS.
2. WHERE "GRADE BREAK" IS CALLED OUT, THE ENTIRE LENGTH OF THE GRADE BREAK BETWEEN THE TWO ADJACENT SURFACE PLANES SHALL BE FLUSH.
3. DO NOT PLACE GRATINGS, JUNCTION BOXES, ACCESS COVERS, OR OTHER APPURTENANCES ON ANY PART OF THE CURB RAMP OR LANDING, OR IN FRONT OF THE CURB RAMP WHERE IT CONNECTS TO THE ROADWAY.
4. SEE CONTRACT PLANS FOR THE CURB DESIGN SPECIFIED. SEE DETAIL CR017ST FOR CURB, & CURB AND GUTTER, & WSDOT STANDARD PLAN F-10.12 FOR DEPRESSED CURB AND GUTTER, AND PEDESTRIAN CURB DETAILS.
5. SEE DETAILS CR012ST & CR013ST FOR CEMENT CONCRETE SIDEWALK DETAILS. SEE CONTRACT PLANS FOR WIDTH AND PLACEMENT OF SIDEWALK.
6. THE BID ITEM "CEMENT CONCRETE CURB RAMP TYPE __" DOES NOT INCLUDE THE ADJACENT CURB, CURB AND GUTTER, DEPRESSED CURB AND GUTTER, PEDESTRIAN CURB, OR SIDEWALKS.
7. THE CURB RAMP LENGTH IS NOT REQUIRED TO EXCEED 15 FEET (UNLESS SHOWN OTHERWISE IN THE CONTRACT PLANS). WHEN APPLYING THE 15-FOOT MAX. LENGTH, THE RUNNING SLOPE OF THE CURB RAMP IS ALLOWED TO EXCEED 8.3%. USE A SINGLE CONSTANT SLOPE FROM BOTTOM OF RAMP TO TOP OF RAMP TO MATCH INTO THE LANDING OVER A HORIZONTAL DISTANCE OF 15 FEET. DO NOT INCLUDE THE ABUTTING LANDING IN THE 15-FOOT MAX. MEASUREMENT.
8. CURB RAMPS AND LANDINGS SHALL RECEIVE A BROOM FINISH. SEE WSDOT STANDARD SPECIFICATIONS 8-14.
9. PEDESTRIAN CURB MAY BE OMITTED IF THE GROUND SURFACE AT THE BACK OF THE CURB RAMP AND/OR LANDING WILL BE AT THE SAME ELEVATION AS THE CURB RAMP OR LANDING AND THERE WILL NOT BE MATERIAL TO RETAIN.

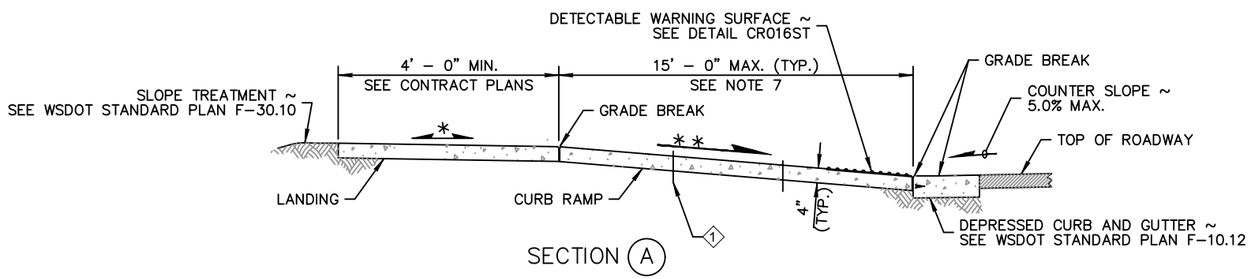

SECTION (A)

LEGEND

◄►	SLOPE IN EITHER DIRECTION
*	1.5 OR FLATTER RECOMMENDED FOR DESIGN/FORMWORK (2% MAX.)
* *	7.5% OR FLATTER RECOMMENDED FOR DESIGN/FORMWORK (8.3% MAX.)
* * *	9.5% OR FLATTER RECOMMENDED FOR DESIGN/FORMWORK (10% MAX.)

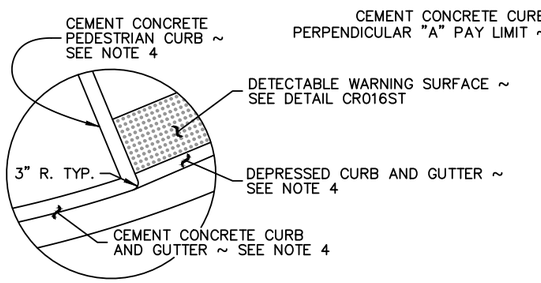

CURB RADIUS DETAIL (B)

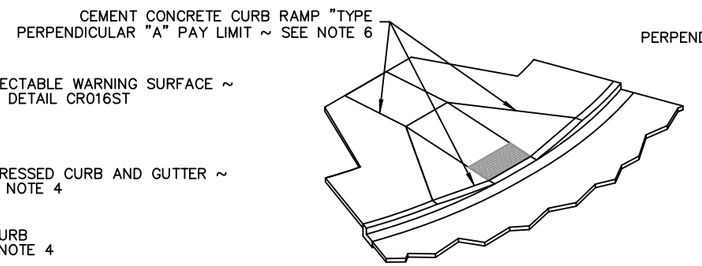

ISOMETRIC VIEW
TYPE PERPENDICULAR A PAY LIMIT

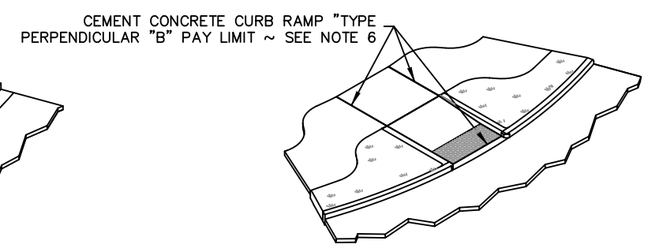

ISOMETRIC VIEW
TYPE PERPENDICULAR B PAY LIMIT

CITY OF CASTLE ROCK			
PERPENDICULAR CURB RAMP			
APPROVED: David Vonna 07-20-20 BY CITY DATE			DWG. NO. CR015STC
DATE: 9/19	DRWN: KAR	CHKD: CLR	SCALE: NONE

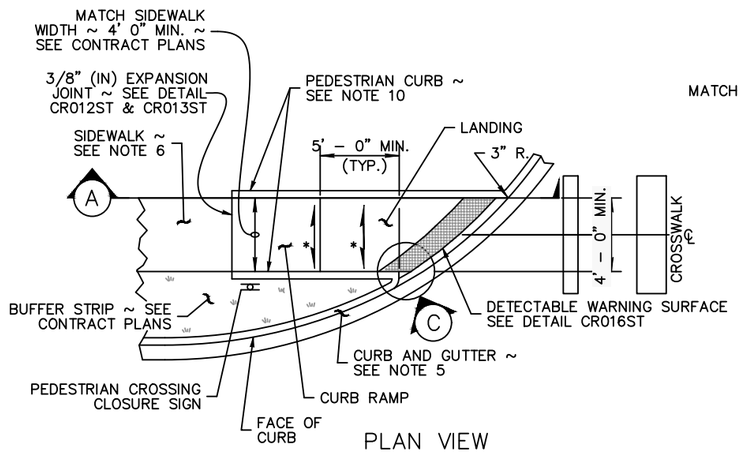

PLAN VIEW
TYPE SINGLE DIRECTION A

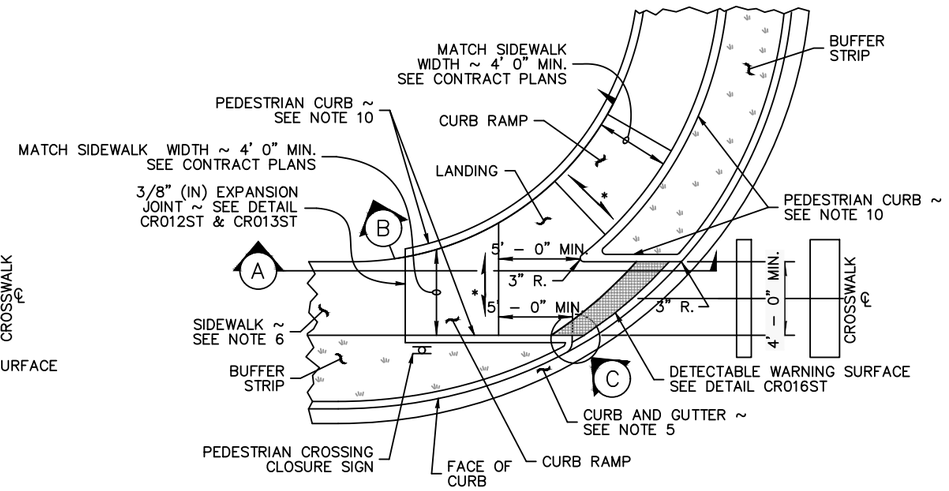

PLAN VIEW
TYPE SINGLE DIRECTION B

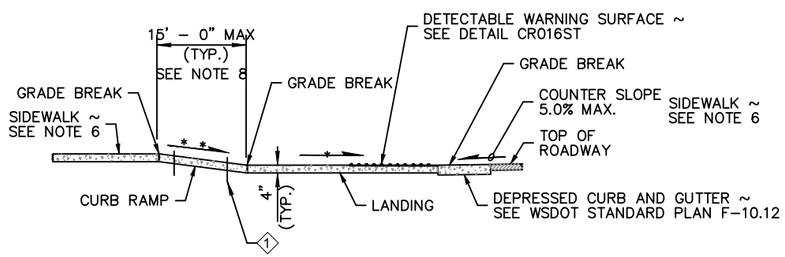

SECTION (A)

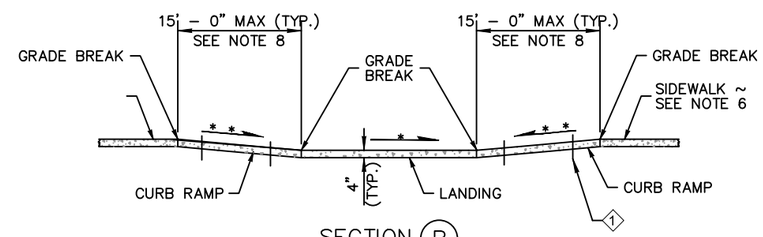

SECTION (B)

(ALONG INSIDE RADIUS AT BACK OF WALKWAY)

1 CONTRACTION JOINT (TYP.) ~ SEE WSDOT STANDARD PLAN F-30.10 FOR CURB RAMP LENGTHS GREATER THAN 8' – 0" PROVIDE CONTRACTION JOINT EQUALLY SPACED 4' – 0" MIN. OC.

NOTES

1. THIS PLAN IS TO BE USED WHERE PEDESTRIAN CROSSING IN ONE DIRECTION IS NOT PERMITTED.
2. AT MARKED CROSSWALKS, THE CONNECTION BETWEEN THE LANDING AND THE ROADWAY MUST BE CONTAINED WITHIN THE WIDTH OF THE CROSSWALK MARKINGS.
3. WHERE "GRADE BREAK" IS CALLED OUT, THE ENTIRE LENGTH OF THE GRADE BREAK BETWEEN THE TWO ADJACENT SURFACE PLANES SHALL BE FLUSH.
4. DO NOT PLACE GRATINGS, JUNCTION BOXES, ACCESS COVERS, OR OTHER APPURTENANCES ON ANY PART OF THE CURB RAMP OR LANDING OR IN THE DEPRESSED CURB AND GUTTER WHERE THE LANDING CONNECTS TO THE ROADWAY.
5. SEE CONTRACT PLANS FOR THE CURB DESIGN SPECIFIED. SEE DETAIL CR017ST FOR CURB, & CURB AND GUTTER, & WSDOT STANDARD PLAN F-10.12 FOR DEPRESSED CURB AND GUTTER, AND PEDESTRIAN CURB DETAILS.
6. SEE DETAILS CR012ST & CR013ST FOR CEMENT CONCRETE SIDEWALK DETAILS. SEE CONTRACT PLANS FOR WIDTH AND PLACEMENT OF SIDEWALK.
7. THE BID ITEM "CEMENT CONCRETE CURB RAMP TYPE __" DOES NOT INCLUDE THE ADJACENT CURB, CURB AND GUTTER, DEPRESSED CURB AND GUTTER, PEDESTRIAN CURB, OR SIDEWALKS.
8. THE CURB RAMP LENGTH IS NOT REQUIRED TO EXCEED 15 FEET (UNLESS SHOWN OTHERWISE IN THE CONTRACT PLANS). WHEN APPLYING THE 15-FOOT MAX. LENGTH (MEASURED FROM BACK OF SIDEWALK) THE RUNNING SLOPE OF THE CURB RAMP IS ALLOWED TO EXCEED 8.3%. USE A SINGLE CONSTANT SLOPE FROM BOTTOM OF RAMP TO TOP OF RAMP TO MATCH INTO THE SIDEWALK OVER A HORIZONTAL DISTANCE OF 15 FEET.
9. CURB RAMPS AND LANDINGS SHALL RECEIVE A BROOM FINISH. SEE STANDARD WSDOT SPECIFICATIONS 8-14.
10. PEDESTRIAN CURB MAY BE OMITTED IF THE GROUND SURFACE AT THE BACK OF THE CURB RAMP AND/OR LANDING WILL BE AT THE SAME ELEVATION AS THE CURB RAMP OR LANDING AND THERE WILL NOT BE MATERIAL TO RETAIN.

LEGEND

SLOPE IN EITHER DIRECTION

* 1.5 OR FLATTER RECOMMENDED FOR DESIGN/FORMWORK (2% MAX.)

* * 7.5% OR FLATTER RECOMMENDED FOR DESIGN/FORMWORK (8.3% MAX.) SEE NOTE 7

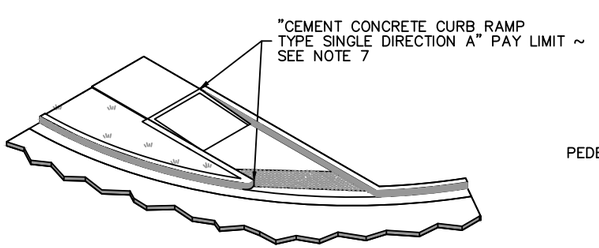

ISOMETRIC VIEW
TYPE SINGLE DIRECTION A
PAY LIMIT

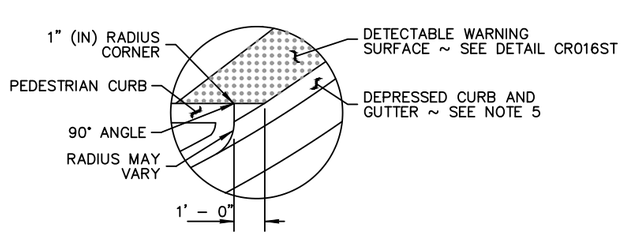

DETAIL (C)

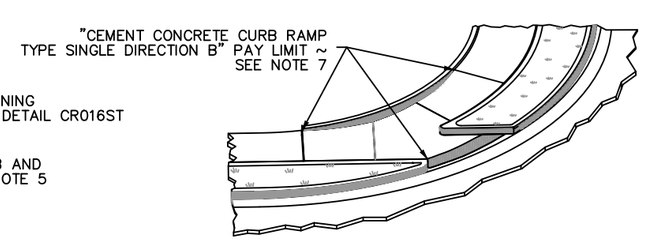

ISOMETRIC VIEW
TYPE SINGLE DIRECTION B
PAY LIMIT

CITY OF CASTLE ROCK			
SINGLE DIRECTION CURB RAMP			
APPROVED: BY CITY		07-20-20 DATE	DWG. NO. CR015STD
DATE: 9/19	DRWN: KAR	CHKD: CLR	SCALE: NONE

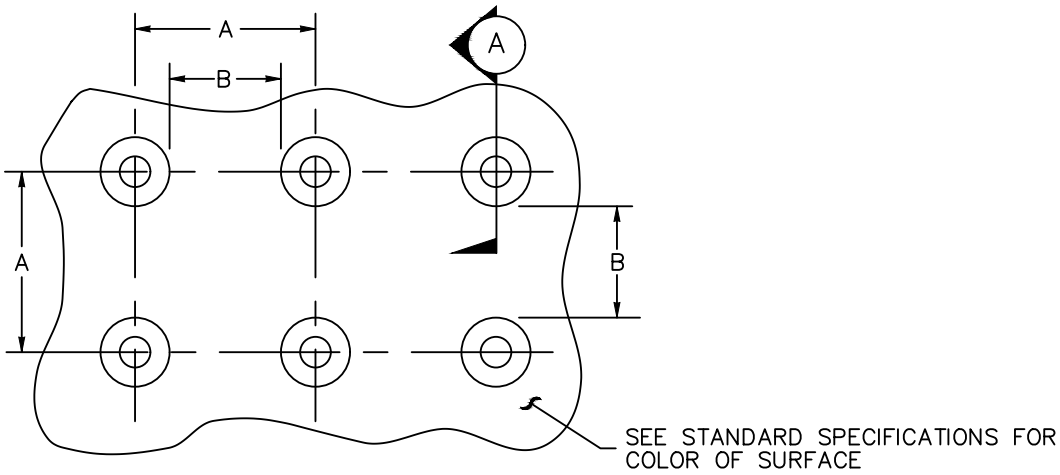

TRUNCATED DOME SPACING
SEE NOTE 3

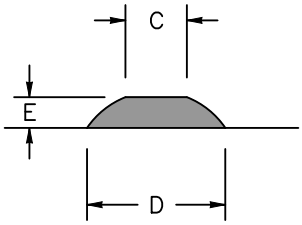

TRUNCATED DOME

SECTION (A)

	MIN.	MAX.
A	1.60"	2.40"
B	0.65"	--
C	0.45"	0.90"
D	0.9"	1.40"
E	0.2"	0.2"

NOTES

1. THE DETECTABLE WARNING SURFACE CAN BE PRECAST TILES OR THE APPLIED PLASTIC MARKINGS.

2. SEE WSDOT STANDARD PLAN F-45.10 FOR PLACEMENT GUIDELINES

DETECTABLE WARNING SURFACE

CITY OF CASTLE ROCK			
DETECTABLE WARNING SURFACE			
APPROVED: BY CITY	07-20-20 DATE		DWG. NO. CR016ST
DATE: 9/19	DRWN: KAR	CHKD: CLR	SCALE: NONE

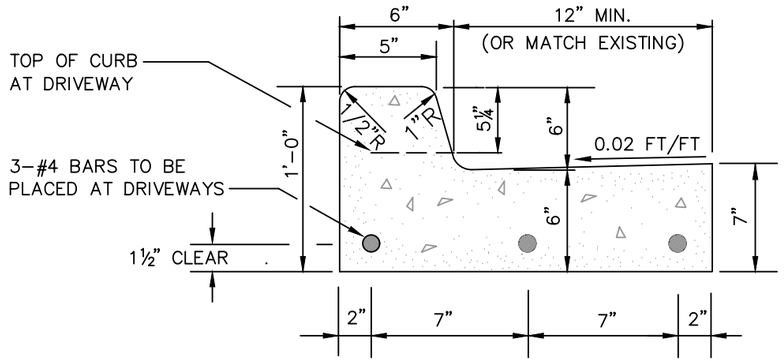

CEMENT CONCRETE TRAFFIC CURB AND GUTTER

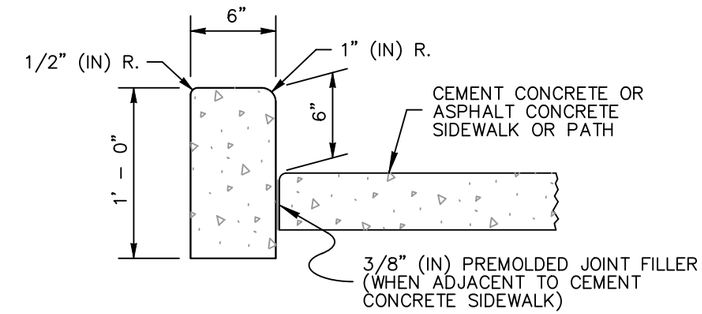

CEMENT CONCRETE PEDESTRIAN CURB

NOTES:

1. THE CURBS, GUTTERS AND SIDEWALKS SHALL HAVE CONTRACTION JOINTS (3/8" x 1½") AT INTERVALS OF NOT GREATER THAN 15'-0"
2. CEMENT CONCRETE SHALL BE CLASS 3000 PSI

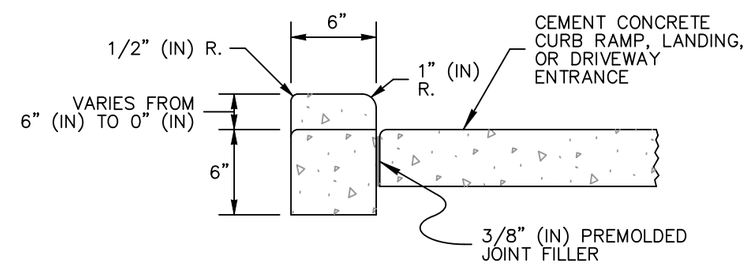

CEMENT CONCRETE PEDESTRIAN CURB

AT CURB RAMPS, LANDINGS,
AND DRIVEWAY ENTRANCES

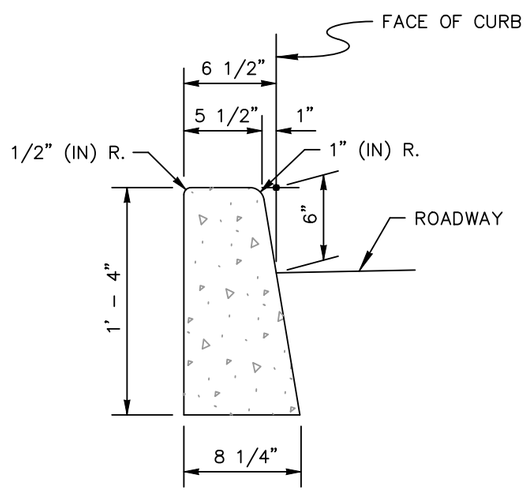

CEMENT CONCRETE TRAFFIC CURB

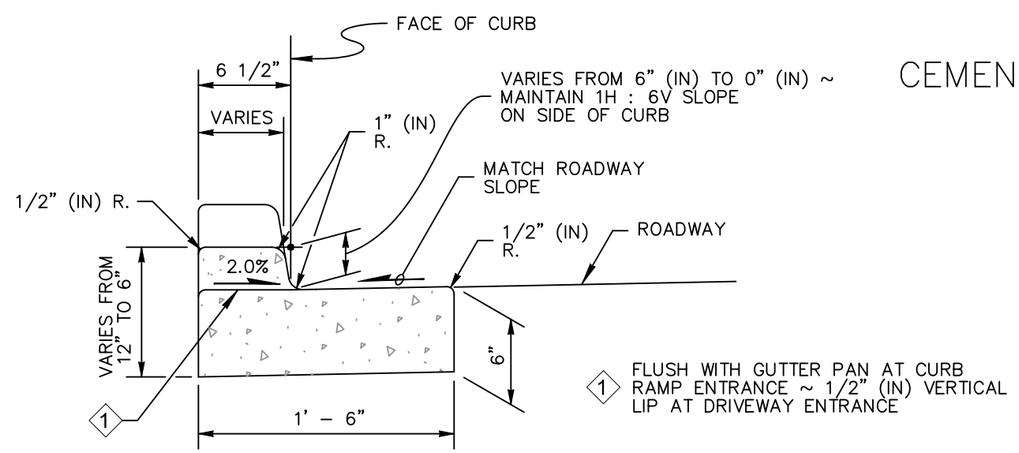

DEPRESSED CURB SECTION

AT CURB RAMPS AND
DRIVEWAY ENTRANCES

CITY OF CASTLE ROCK			
CONCRETE CURB AND GUTTER			
APPROVED: BY CITY	07-20-20 DATE		DWG. NO. CR017ST
DATE: 9/19	DRWN: KAR	CHKD: CLR	SCALE: NONE

NOTE

1. Use the dimensions shown on this plan for each type of Traffic Arrow beign placed on roadways with a posted speed limit of 40 mph or lower.
2. Traffic Arrows shall be per WSDOT Std Plan M-24.40 for low speed roadways

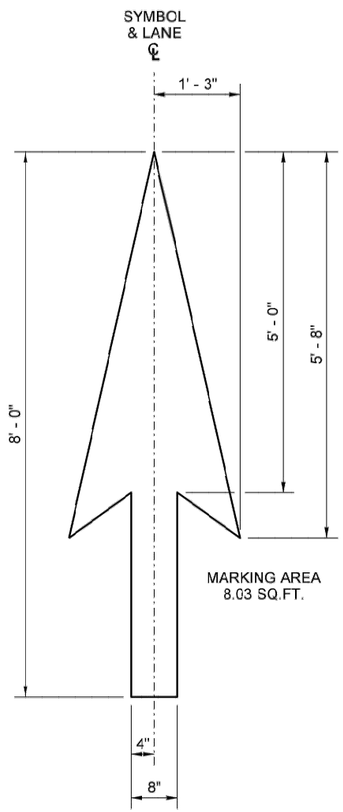

TYPE 1S
TRAFFIC ARROW

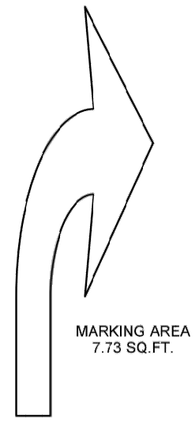

TYPE 2SR (RIGHT)
TRAFFIC ARROW

MIRROR IMAGE OF
TYPE 2SL TRAFFIC ARROW
(SHOWN AT REDUCED SCALE)

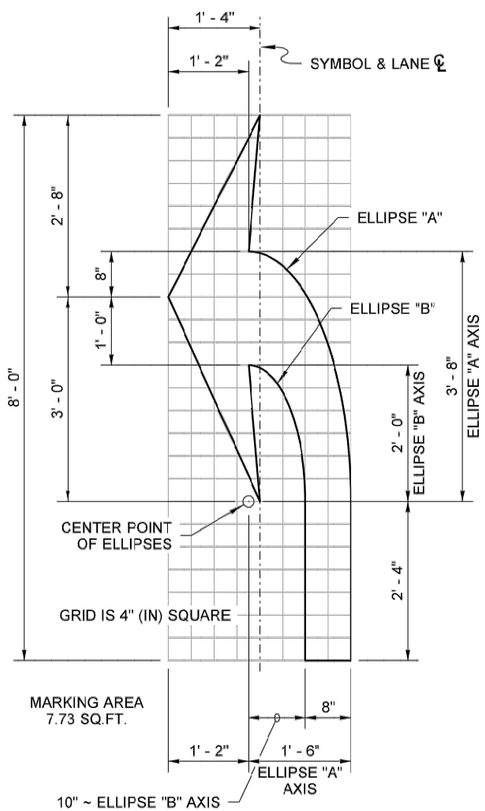

TYPE 2SL (LEFT) TRAFFIC ARROW

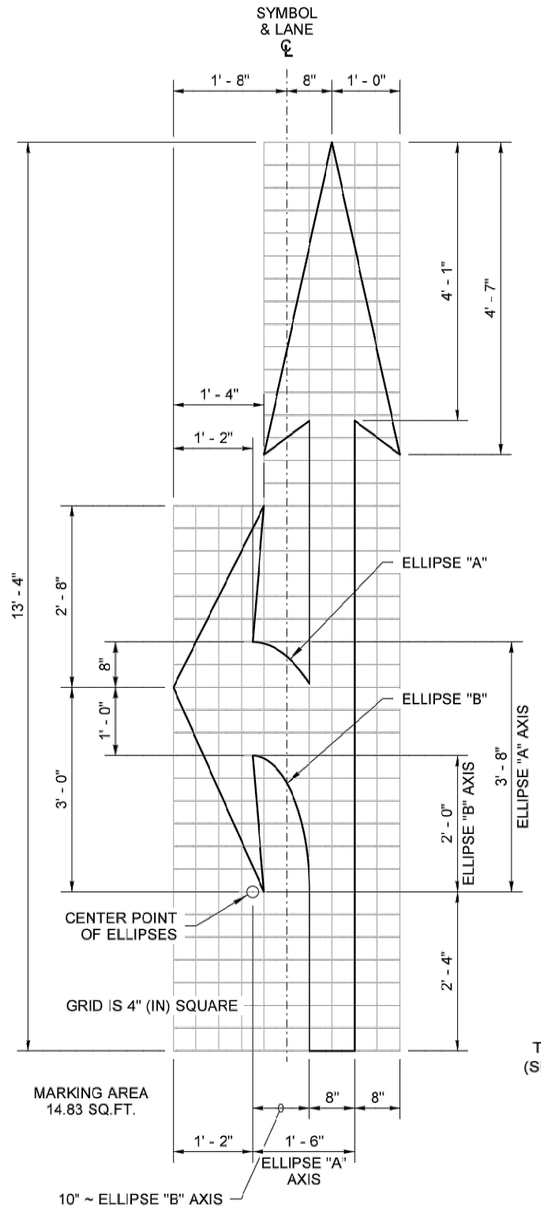

TYPE 3SL (LEFT) TRAFFIC ARROW

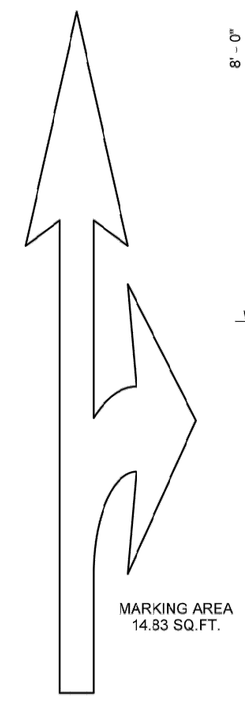

TYPE 3SR (RIGHT)
TRAFFIC ARROW

MIRROR IMAGE OF
TYPE 3SL TRAFFIC ARROW
(SHOWN AT REDUCED SCALE)

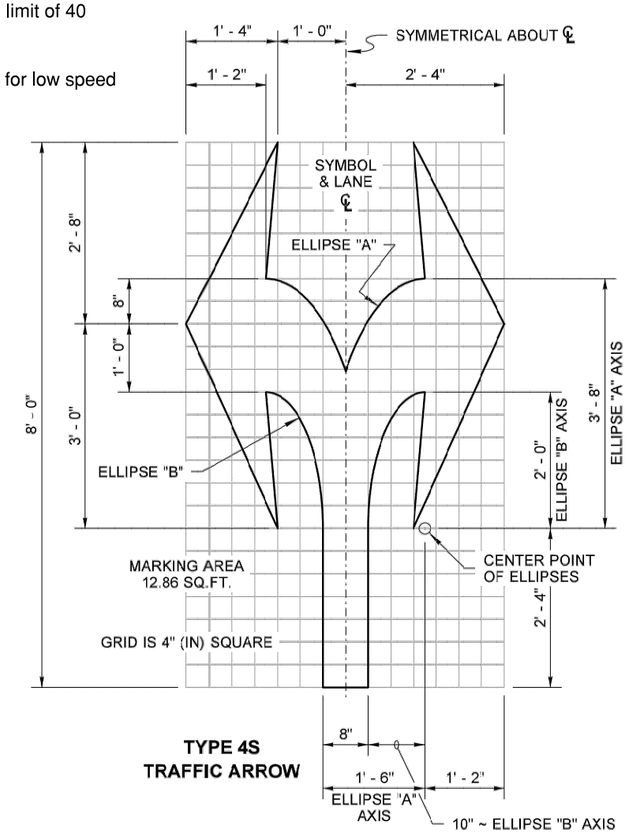

TYPE 4S
TRAFFIC ARROW

CITY OF CASTLE ROCK			
TURN ARROW DETAILS			
APPROVED: BY CITY	07–20–20 DATE		DWG. NO. CR018STA
DATE: 10/19	DRWN: W.M.	CHKD: C.L.R.	SCALE: NONE

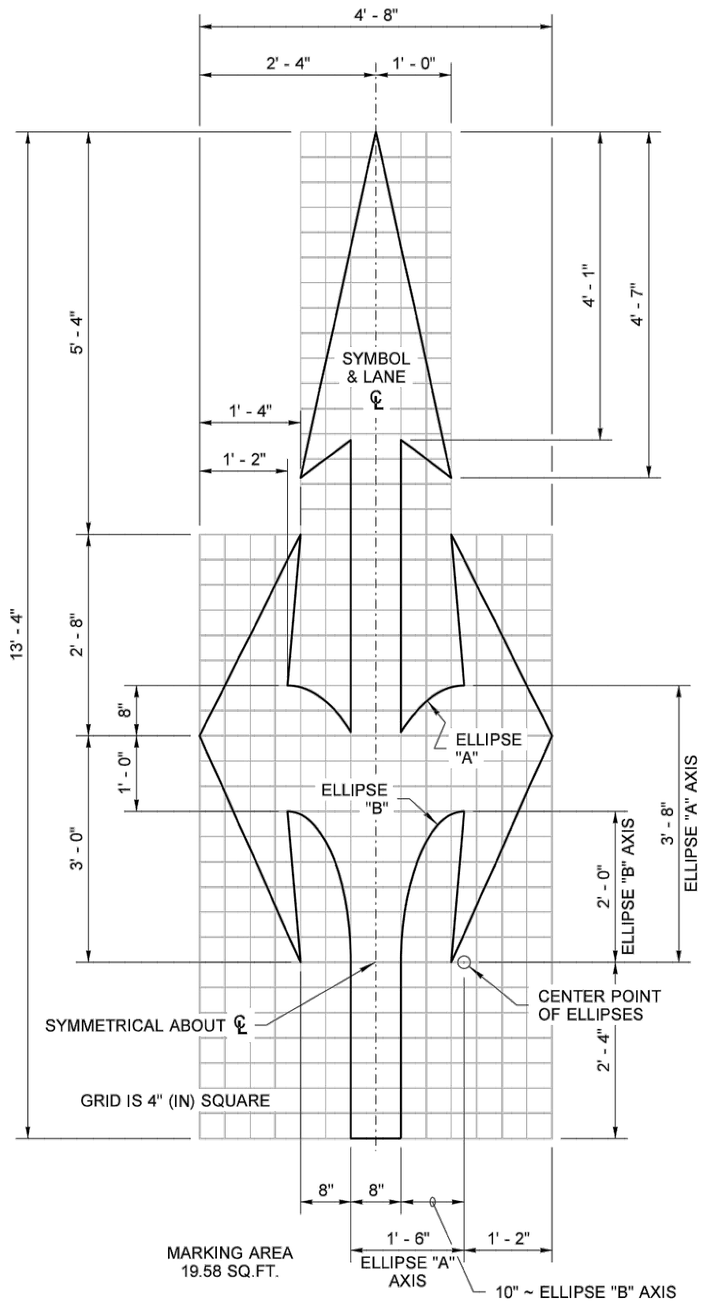

TYPE 7S TRAFFIC ARROW

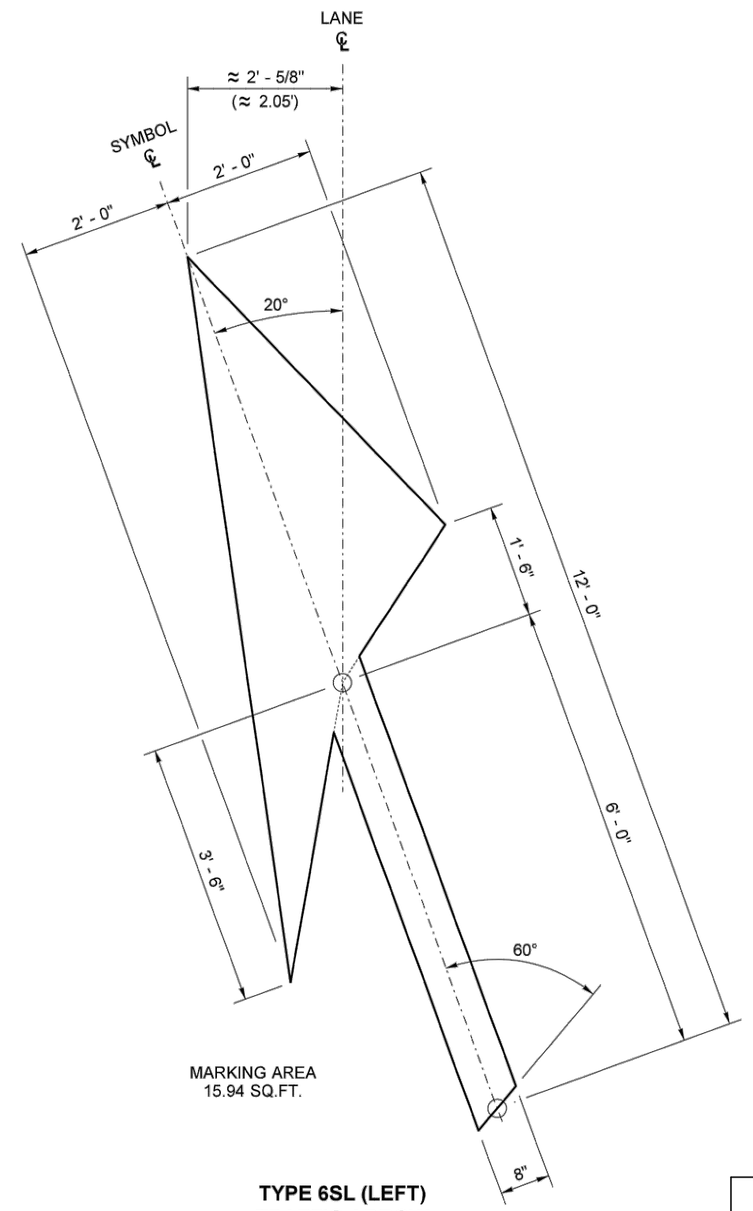

TYPE 6SL (LEFT)
TRAFFIC ARROW

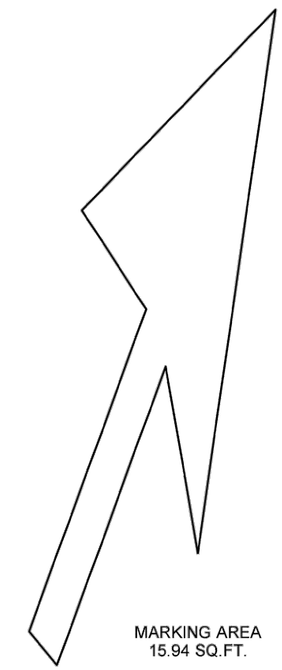

TYPE 6SR (RIGHT)
TRAFFIC ARROW

MIRROR IMAGE OF TYPE 6SL
(MIRRORED ABOUT LANE CENTERLINE)
(SHOWN AT REDUCED SCALE)

CITY OF CASTLE ROCK			
TURN ARROW DETAILS			
APPROVED: BY CITY		07-20-20 DATE	DWG. NO. CR018STB
DATE: 10/19	DRWN: W.M.	CHKD: C.L.R.	SCALE: NONE

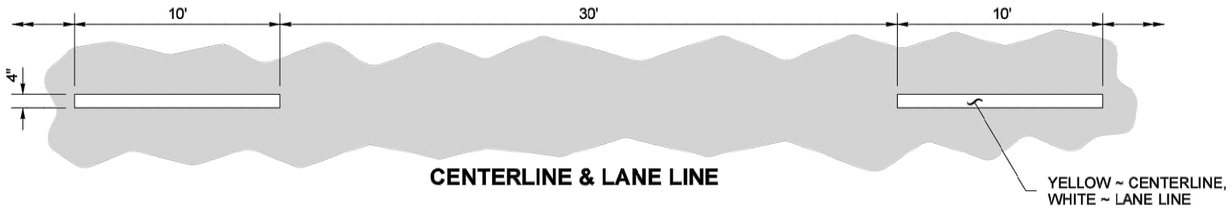

CENTERLINE & LANE LINE

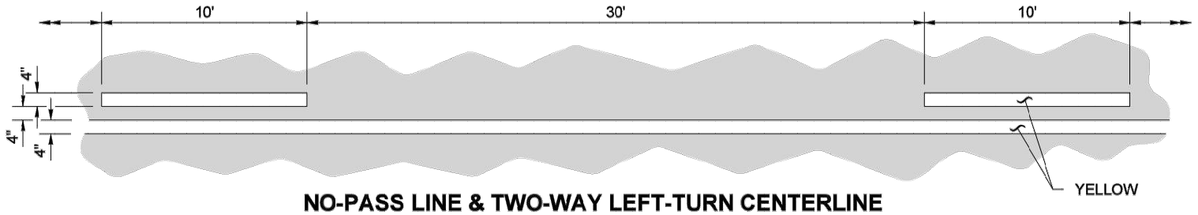

NO-PASS LINE & TWO-WAY LEFT-TURN CENTERLINE

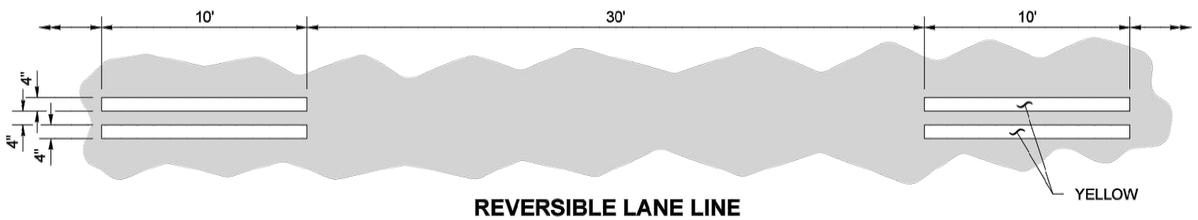

REVERSIBLE LANE LINE

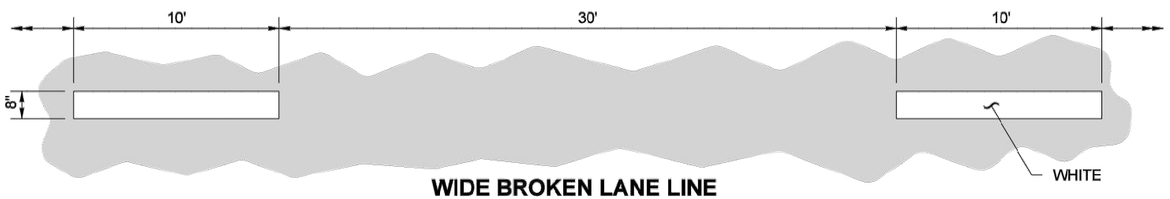

WIDE BROKEN LANE LINE

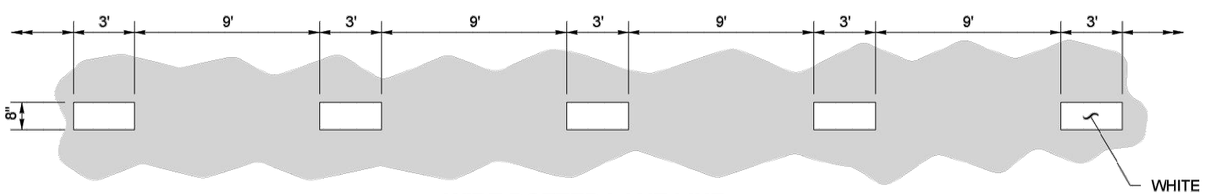

WIDE DOTTED LANE LINE

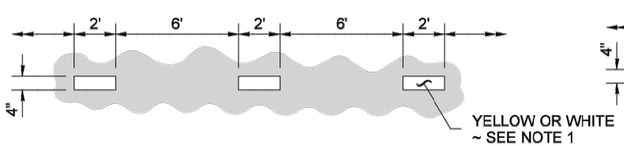

DOTTED EXTENSION LINE

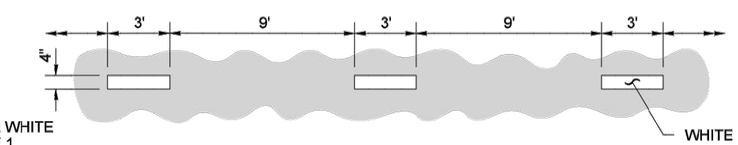

DOTTED LANE LINE

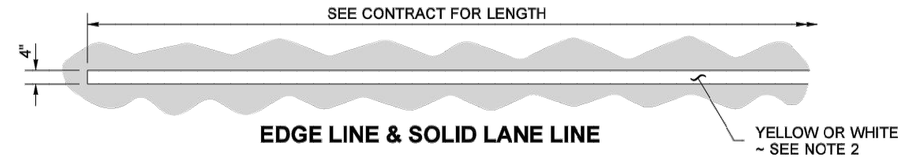

EDGE LINE & SOLID LANE LINE

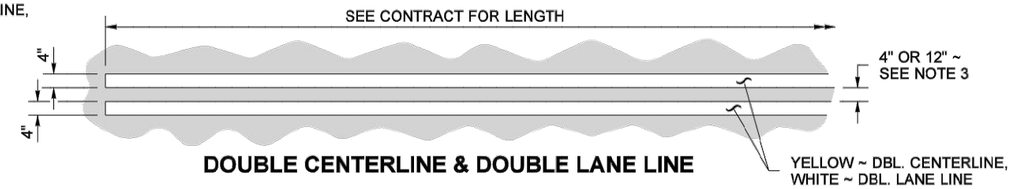

DOUBLE CENTERLINE & DOUBLE LANE LINE

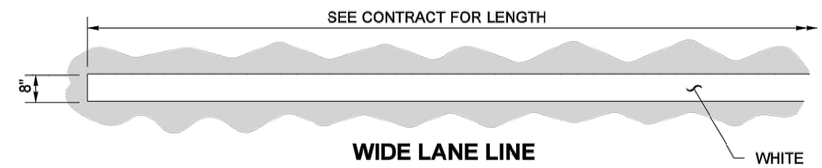

WIDE LANE LINE

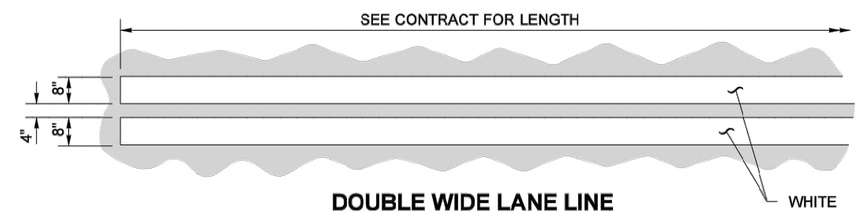

DOUBLE WIDE LANE LINE

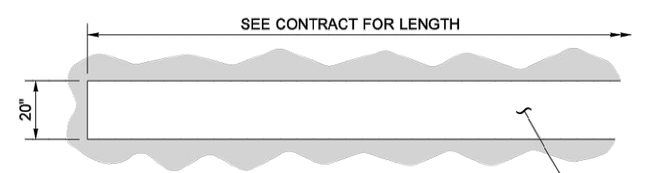

BARRIER CENTERLINE

NOTES

1. Dotted Extension Line shall be the same color as the line it is extending.
2. Edge Line shall be white on the right edge of traveled way, and yellow on the left edge of traveled way (on one-way roadways). Solid Lane Line shall be white.
3. The distance between the lines of the Double Centerline shall be 12" everywhere, except 4" for left-turn channelization and narrow roadways with lane widths of 10 feet or less. Local Agencies (on non-state routes) may specify a 4" distance for all locations.

   The distance between the lines of the Double Lane Line shall be 4".

CITY OF CASTLE ROCK			
PAVEMENT MARKINGS			
APPROVED: BY CITY	07-20-20 DATE		DWG. NO. CR019ST
DATE: 10/19	DRWN: W.M.	CHKD: C.L.R.	SCALE: NONE

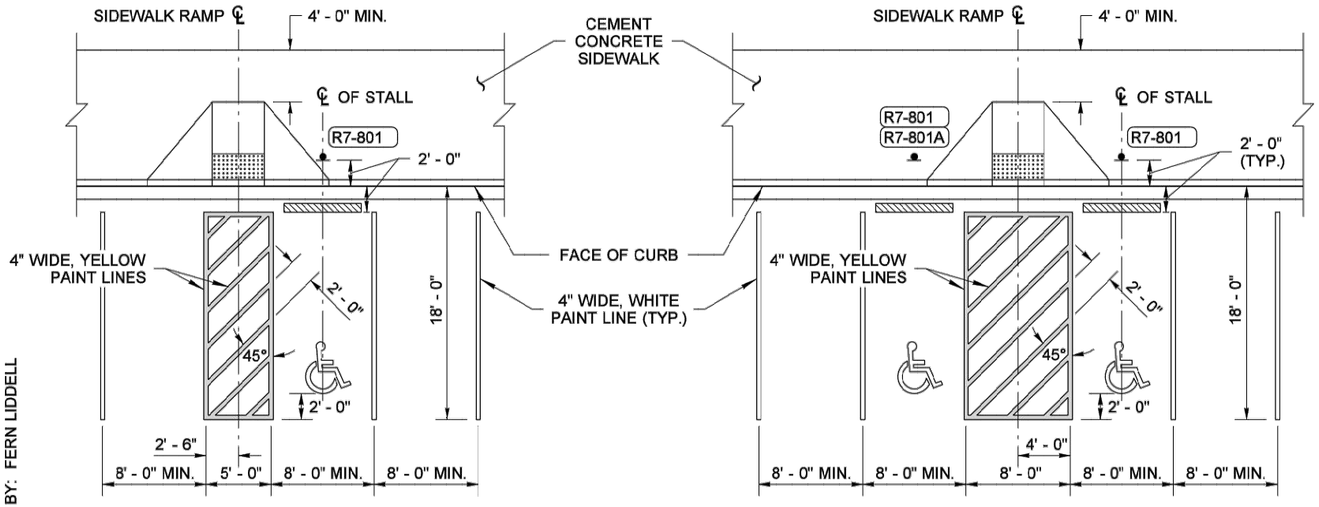

PLAN
ONE ACCESSIBLE STALL
90° PARKING STALL ARRANGEMENT

PLAN
TWO ACCESSIBLE STALLS
90° PARKING STALL ARRANGEMENT

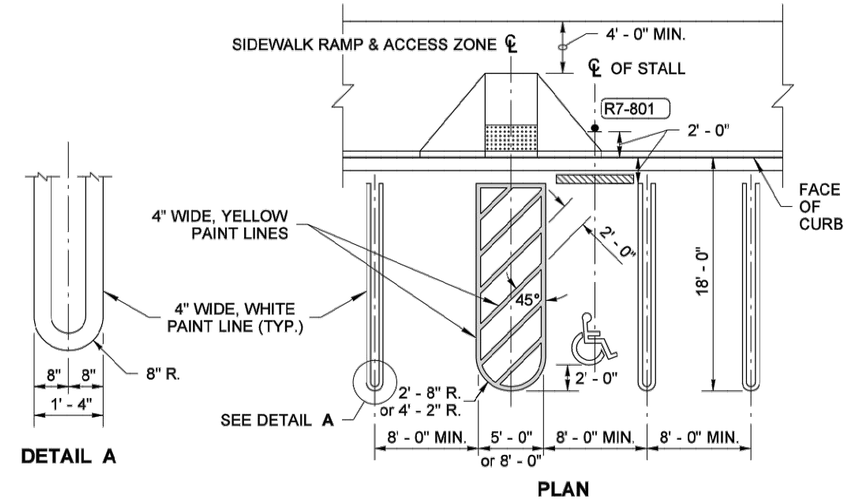

DETAIL A

PLAN
ALTERNATIVE PARKING STALL MARKINGS
USE ONLY WHEN SPECIFIED IN THE CONTRACT

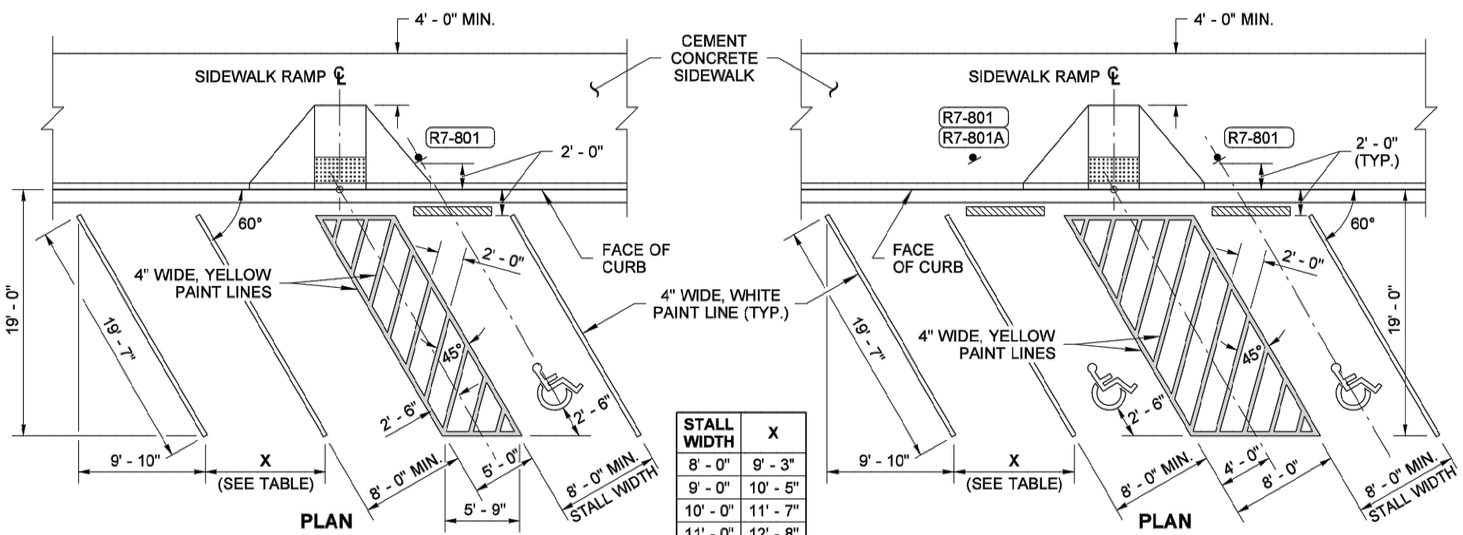

STALL WIDTH	X
8' - 0"	9' - 3"
9' - 0"	10' - 5"
10' - 0"	11' - 7"
11' - 0"	12' - 8"
12' - 0"	13' - 10"

PLAN
ONE ACCESSIBLE STALL
60° PARKING STALL ARRANGEMENT

PLAN
TWO ACCESSIBLE STALLS
60° PARKING STALL ARRANGEMENT

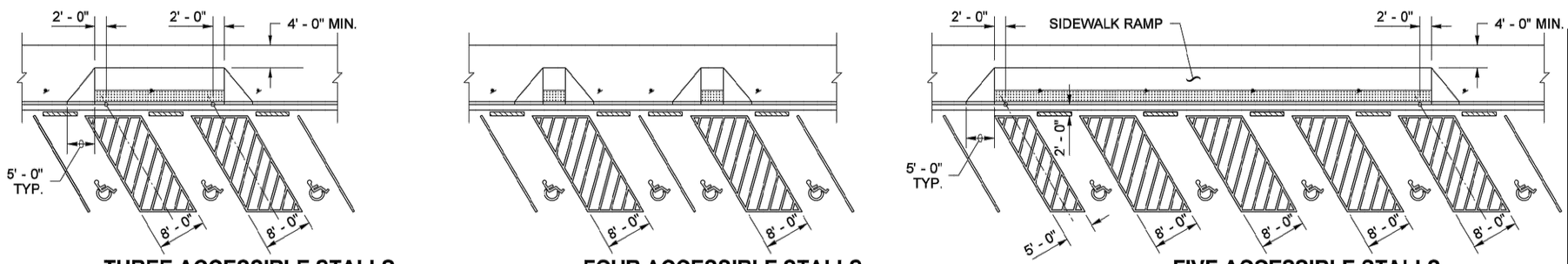

THREE ACCESSIBLE STALLS

FOUR ACCESSIBLE STALLS

FIVE ACCESSIBLE STALLS

NOTES

1. Three, four and five accessible stall arrangements may be either 60° (angled) or 90° (perpendicular) parking arrangements. See Contract.
2. An Access Parking Space Symbol is required for each accessible parking stall. A blue background and white border are required when the symbol is installed on a cement concrete surface.
3. All accessible stalls shall have wheel stops. Place wheel stops in other stalls when specified in the contract. Wheel stops shall be approximately 6" high and a minimum of 6' long.
4. Refer to the Standard Plans for sidewalk ramp, detectable warning pattern, and curb details.

LEGEND

- R7-801 — Reserved Parking Sign and post with R7-801A Plaque, if indicated (See Sign Fabrication Manual)
- Access Parking Space Symbol
- Manufactured wheel stop
- Detectable Warning Pattern

DRAWN BY: FERN LIDDELL

CITY OF CASTLE ROCK			
PARKING SPACE MARKINGS			
APPROVED: BY CITY	07-20-20 DATE		DWG. NO. CR020ST
DATE: 12/19	DRWN: KAR	CHKD: C.L.R.	SCALE: NONE

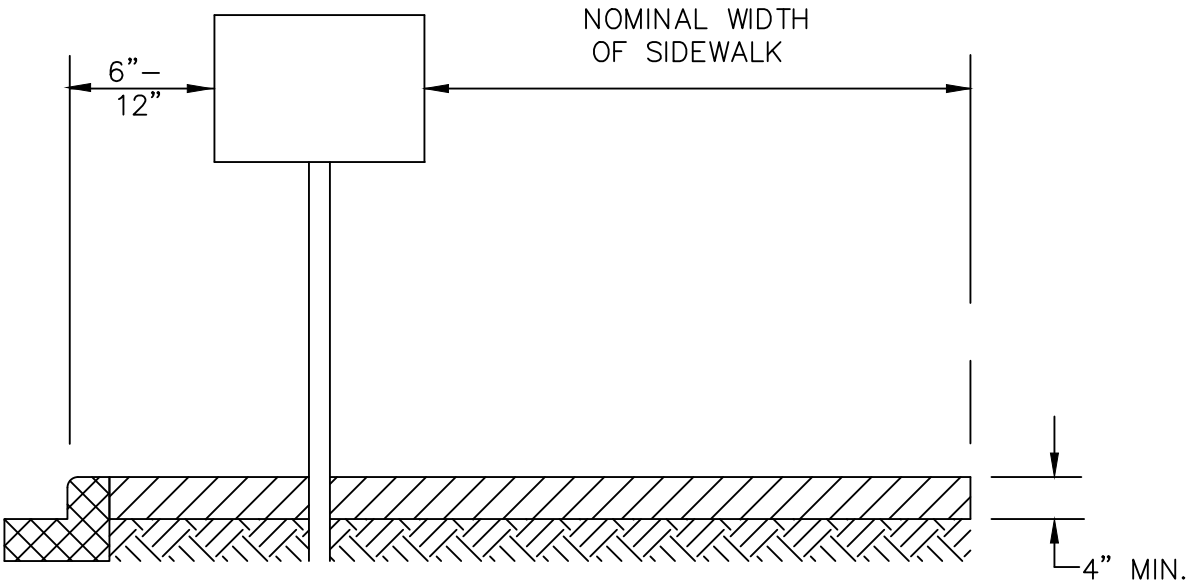

NOTE:

MAILBOXES SHALL BE PER WSDOT STANDARD PLANS H–70.10 & H–70.20 TYPE I OR TYPE 2.

CITY OF CASTLE ROCK			
MAILBOX DETAIL			
APPROVED: BY CITY		07–20–20 DATE	DWG. NO. CR021ST
DATE: 9/19	DRWN: KAR	CHKD: CLR	SCALE: NONE

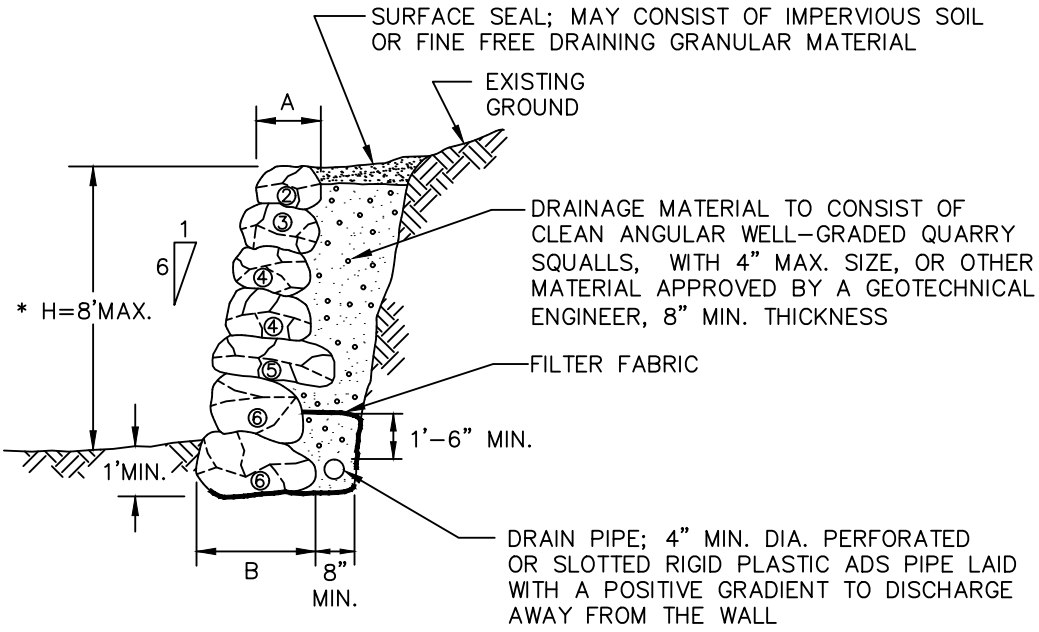

SECTION

SIZE	APPROXIMATE WEIGHT – LBS.	APPROXIMATE DIAMETER
1 MAN	50–200	12"– 18"
2 MAN	200–700	18"– 28"
3 MAN	700–2000	28"– 36"
4 MAN	2000–4000	36"– 48"
5 MAN	4000–6000	48"– 54"
6 MAN	6000–8000	54"– 50"

NOTE:

FOR AREAS WITH PEDESTRIANS PROVIDE SUITABLE CITY APPROVED FENCE AT TOP OF WALL FOR ALL HEIGHTS OF WALL EXCEEDING 30 INCHES.

* NOTE:

4' MIN. HIGH CYCLONE FENCE REQUIRED ABOVE WALL WHEN WALL HEIGHT IS 3' OR GREATER

H	B	A	REVISIONS
6'–0" OR LESS	3'–0"	2'–0"	
6'–0' H≤ 8'–0"	4'–4"	3'–0"	

ROCKERY SCHEDULE

ROCK WALL DETAIL

CITY OF CASTLE ROCK			
ROCK WALL DETAIL			
APPROVED: BY CITY	07–20–20 DATE		DWG. NO. CR022ST
DATE: 9/19	DRWN: KAR	CHKD: CLR	SCALE: NONE

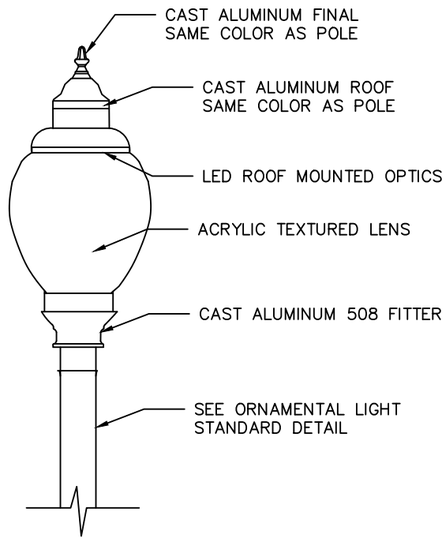

SPECIFICATIONS:

MAKE, MODEL:	STERNBERG OLD TOWN LED LUMINARE
MODEL NO.:	A850ASRLED/5P/6ARC35T3/ML/CM
LIGHT SOURCE:	LED (84 LED'S)
GLOBE MATERIAL:	ACORN ACRYLIC
IES CLASSIFICATION:	TYPE III
WATTAGE:	96W
COLOR TEMP:	3500K
VOLTAGE:	AUTO-SENSING VOLTAGE (120-277 VOLTS)
PAINT:	CASTLE ROCK GREEN

LUMINAIRE DETAIL
N.T.S.

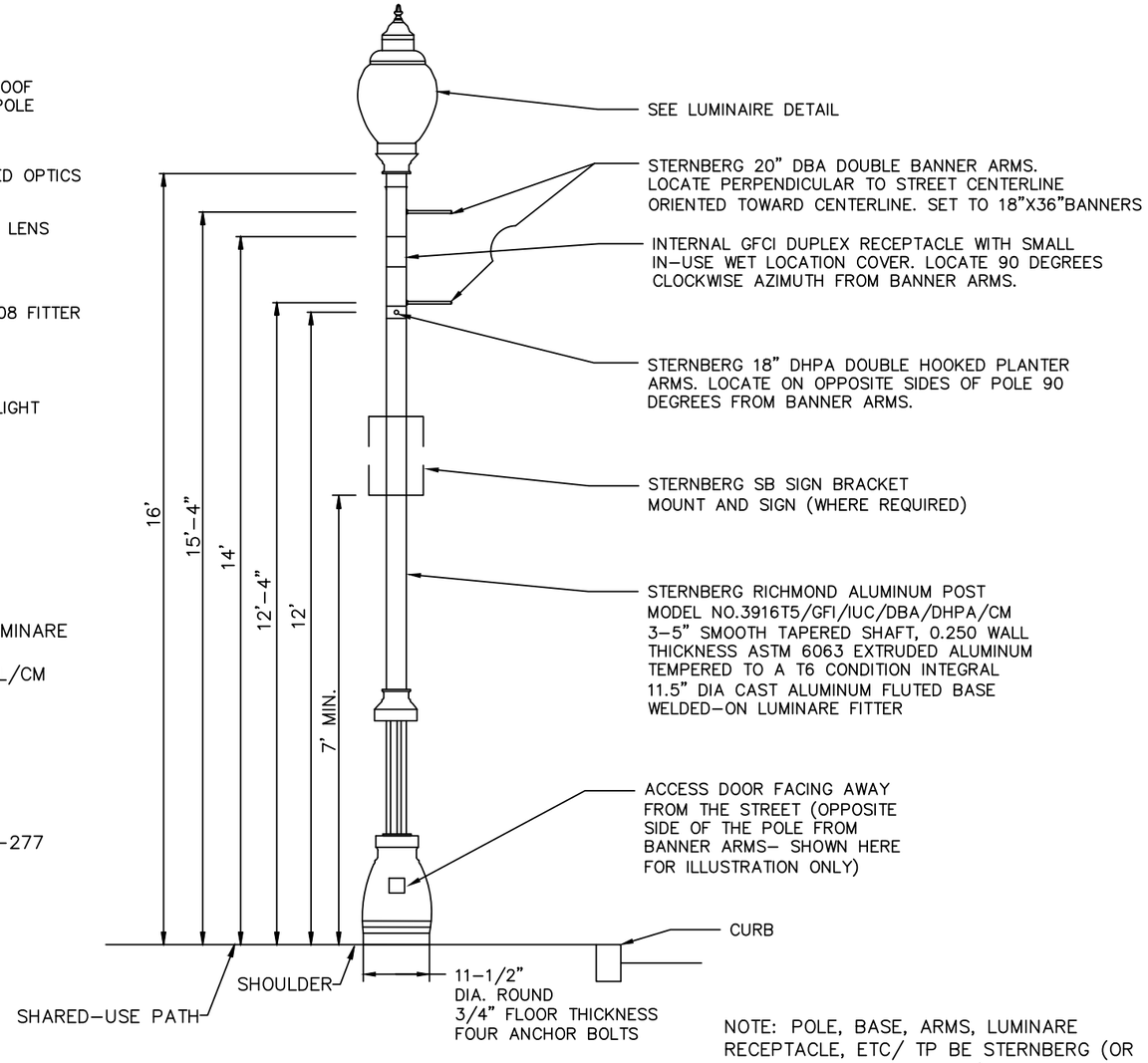

ORNAMENTAL LIGHT STANDARD DETAIL
N.T.S.

NOTE: POLE, BASE, ARMS, LUMINARE RECEPTACLE, ETC/ TP BE STERNBERG (OR EQUAL APPROVED BY CITY) MODEL NO INDICATED. COLOR SHALL MATCH EXISTING FOREST GREEN DECORATIVE LUMINARES. POLE WELDED FOR SINGLE UNIT CONSTRUCTION

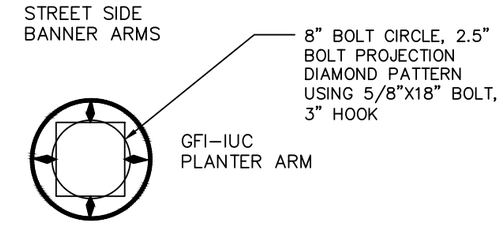

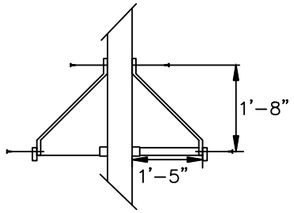

SPECIAL DOUBLE HUNG
PLANTER ARM WITH SUPPORT
STRAP (SEE DETAIL)
1.25" OD SOLID BAR
18" WIDE (EACH SIDE)

75LB MAX (EACH SIDE)

PLANTER ARM DETAIL

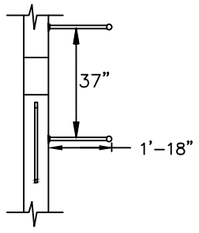

THE (2) 7/8" DIA BANNER
ARMS ARE 37" APART FROM
THE TOP OF THE UPPER ARM,
TO THE BOTTOM OF THE
LOWER ARM 20" LONG BANNER
ARMS (NOT AS SHOWN)

RIGHT SIDE VEIW

POST DETAIL
N.T.S.

CITY OF CASTLE ROCK			
ILLUMINATION DETAILS			
APPROVED: BY CITY	07-20-20 DATE		DWG. NO. CR023ST
DATE: 10/19	DRWN: W.M.	CHKD: C.L.R.	SCALE: NONE